FIGURES

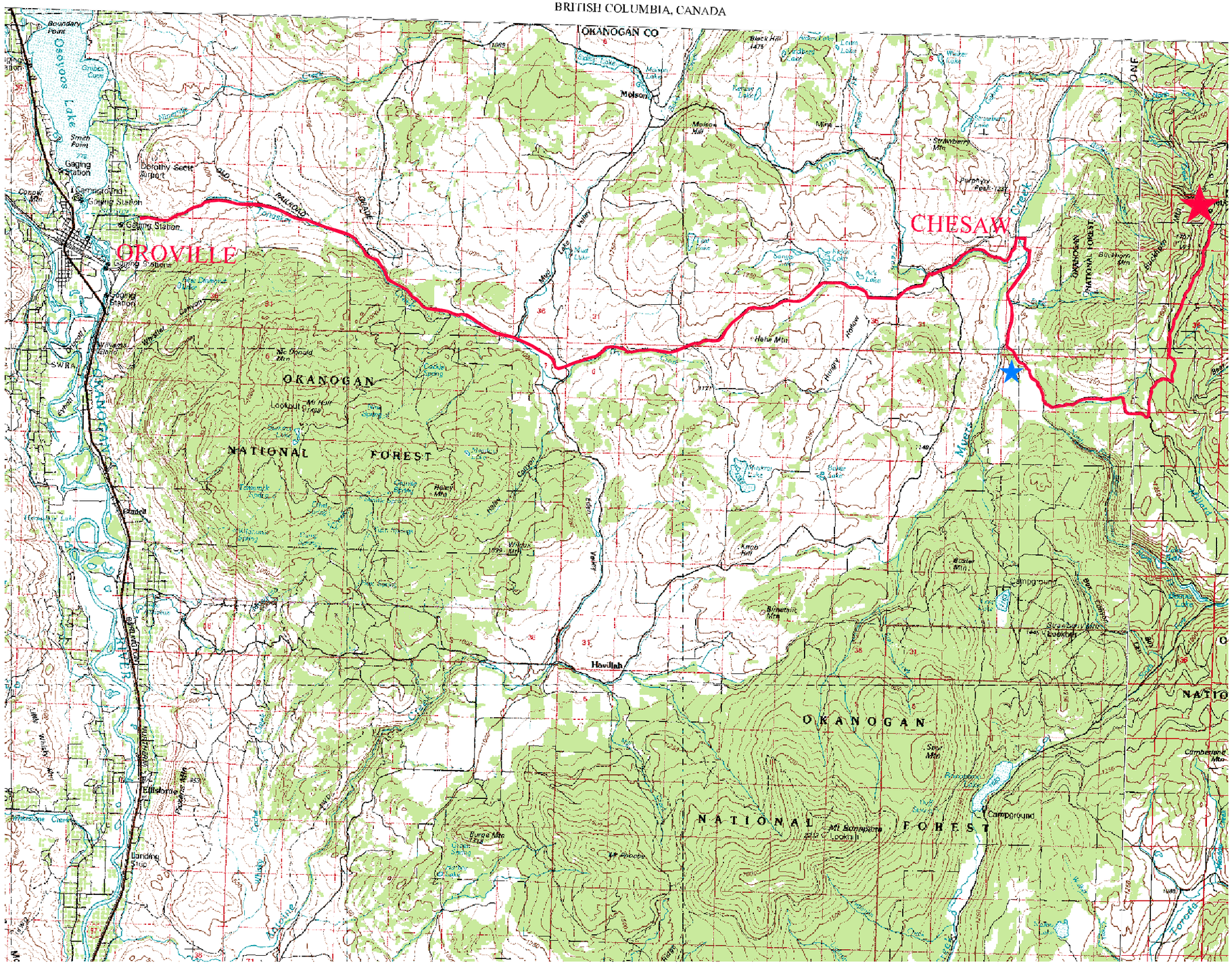

LEGEND

- BUCKHORN MINE SITE
- ROUTE FROM OROVILLE
- BUCKHORN MILL/TDF SITE

10000 0 10000

1" = 10000' Feet

PROJECT

BUCKHORN MOUNTAIN PROJECT
OKANOGAN CO., WASHINGTON

TITLE

PROJECT LOCATION MAP

CROWN RESOURCES

FILE No. 0232002A016

SCALE AS SHOWN | REV. A

FIGURE 1

Dwg Name: N:\023-2002\0232002A016.dwg
Last Update: May 29, 2003 10:40 By: mjumeau
Last Plotted: May 29, 2003 10:40 By: mjumeau
Machine: CAD_Jumeau

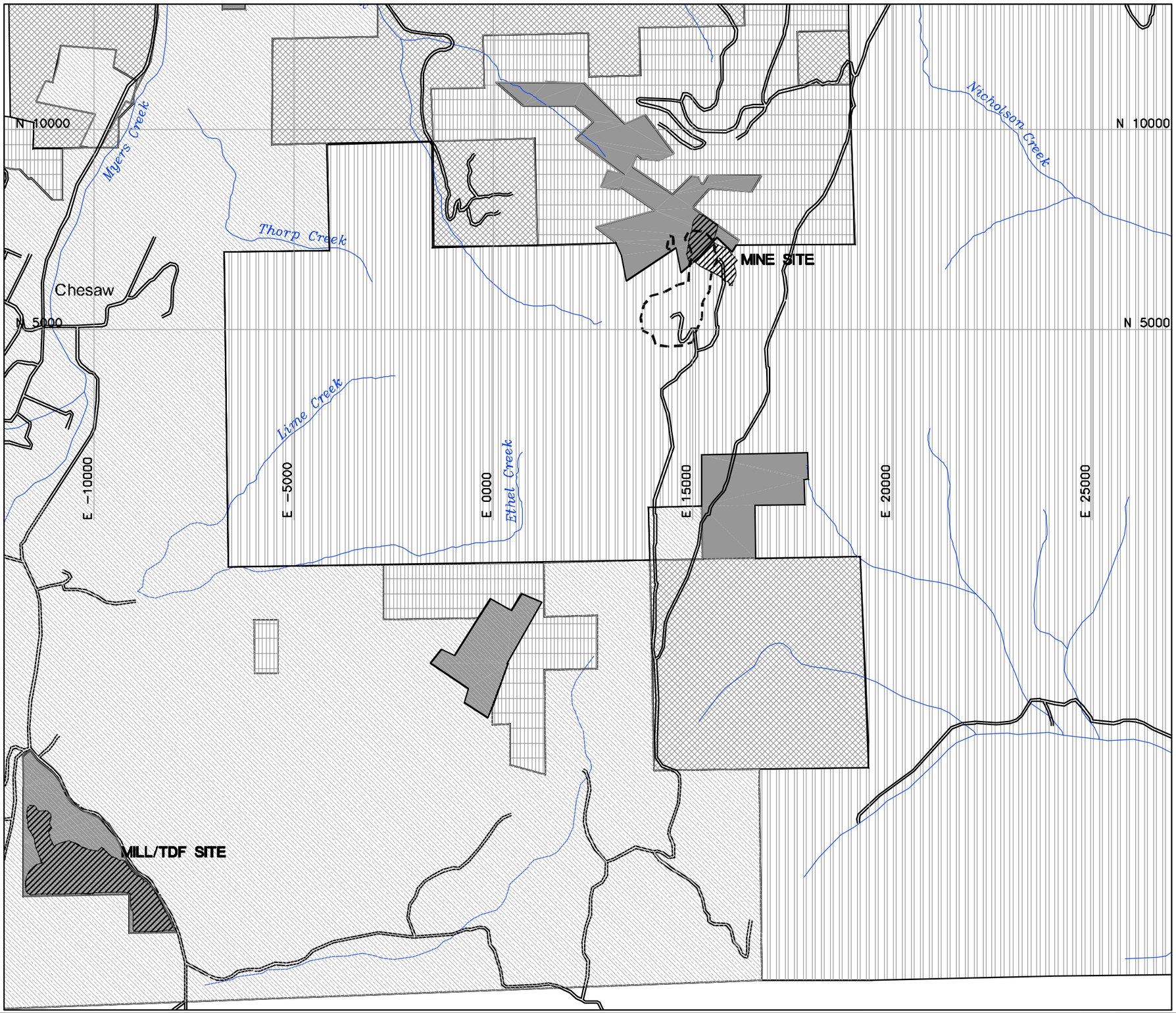

LEGEND

- STATE LAND
- BLM LAND
- FOREST SERVICE LAND
- CROWN RESOURCES CONTROLLED LAND
- PRIVATE LAND
- FACILITY
- ORE BODY

Scale in Feet

0 1250 2500 5000

1" = 2500 feet

PROJECT

BUCKHORN MOUNTAIN PROJECT
OKANOGAN CO., WASHINGTON

TITLE

LAND STATUS MAP

CROWN RESOURCES

FILE No. 0232002A012

SCALE AS SHOWN | REV. B

FIGURE 2

Dwg Name: N:\023-2002\0232002A012.dwg
Last Updated: May 29, 2003 09:03 By:
Last Plotted: Jun 3, 2003 10:42 By: mjumsteu
Machine: CAD_Juneau

Dwg Name: N:\023-2002\0232002A014.dwg
Last Update: May 29, 2003 09:05 By:
Last Plot: Jun 13, 2003 10:45 By: mjuneau
Machine: CAD_Juneau

Buckhorn Mt. Mine Plan
Oblique View

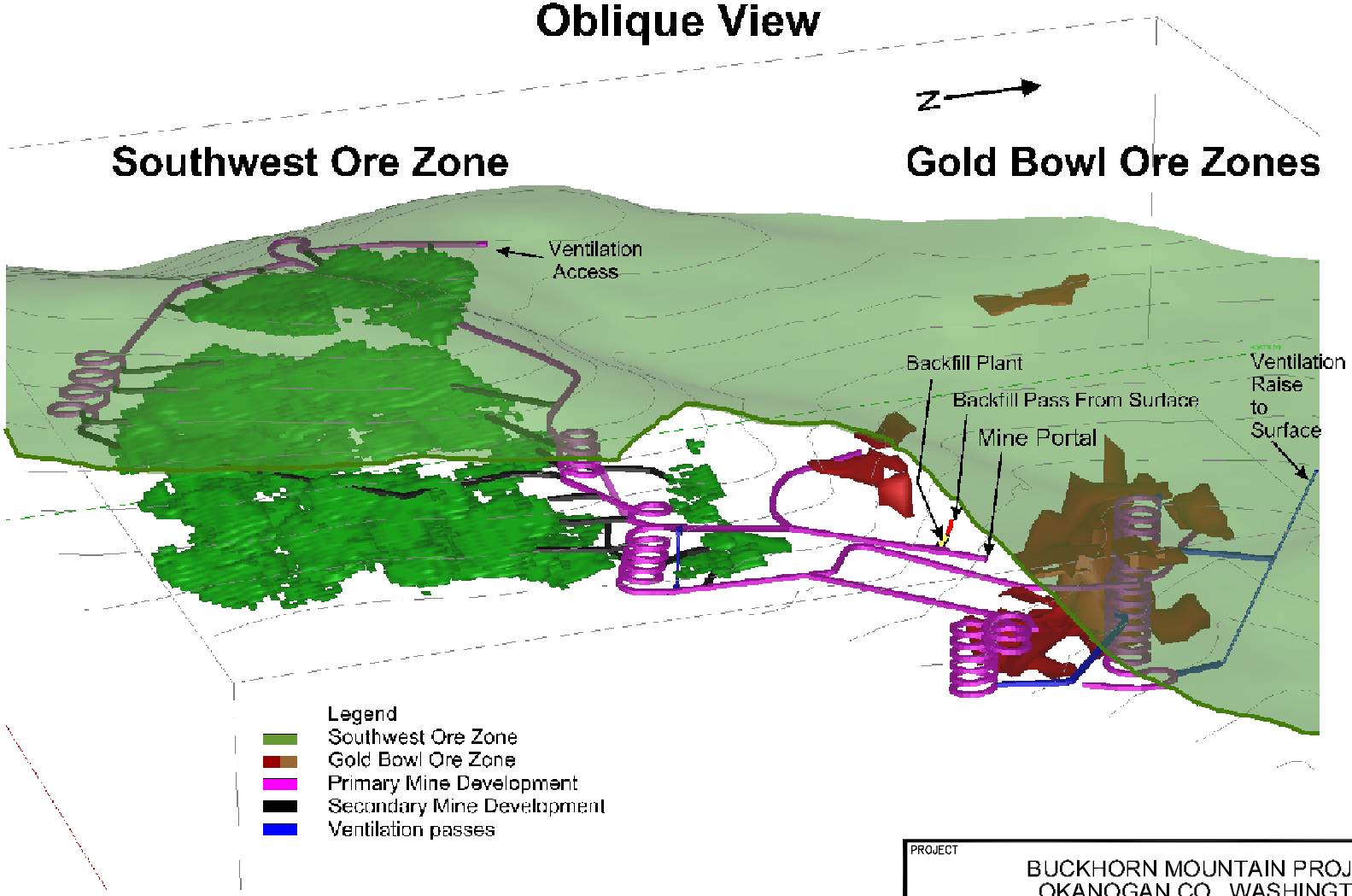

PROJECT

BUCKHORN MOUNTAIN PROJECT
OKANOGAN CO., WASHINGTON

TITLE

MINE PLAN
OBLIQUE VIEW

CROWN RESOURCES

FILE No.	0232002A014
SCALE	N.T.S.
REV.	A

FIGURE 3

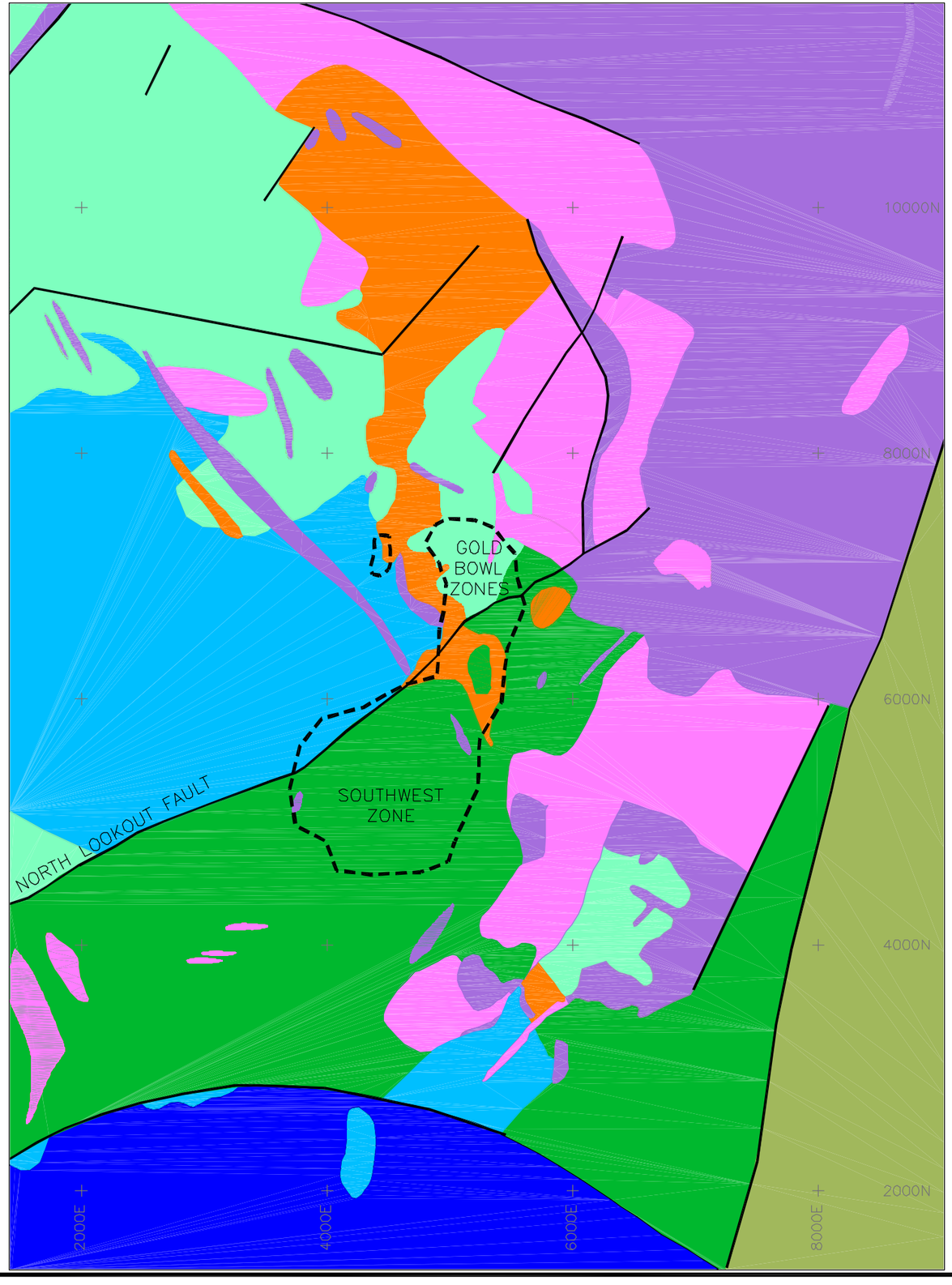

LEGEND

Fault

Surface Projection of Outer Boundary of Ore Bodies

LITHOLOGY

- Eocene Volcaniclastics
- Skarn
- Andesite
- Diorite
- Other Intrusives
- Clastics/Volcaniclastics
- Marble
- Clastics

1000 0 1000

1" = 1000' Feet

PROJECT

BUCKHORN MOUNTAIN PROJECT
OKANOGAN CO., WASHINGTON

TITLE

SITE GEOLOGY MAP

CROWN RESOURCES

FILE No.	0232002A007
SCALE AS SHOWN	REV. B

FIGURE 4

Dwg Name: N:\023-2002\0232002A007.dwg
Last Update: May 29, 2003 09:56 By:
Last Plot: Jun 13, 2003 11:02 By: mjuneau
Machine: CAD_Juneau

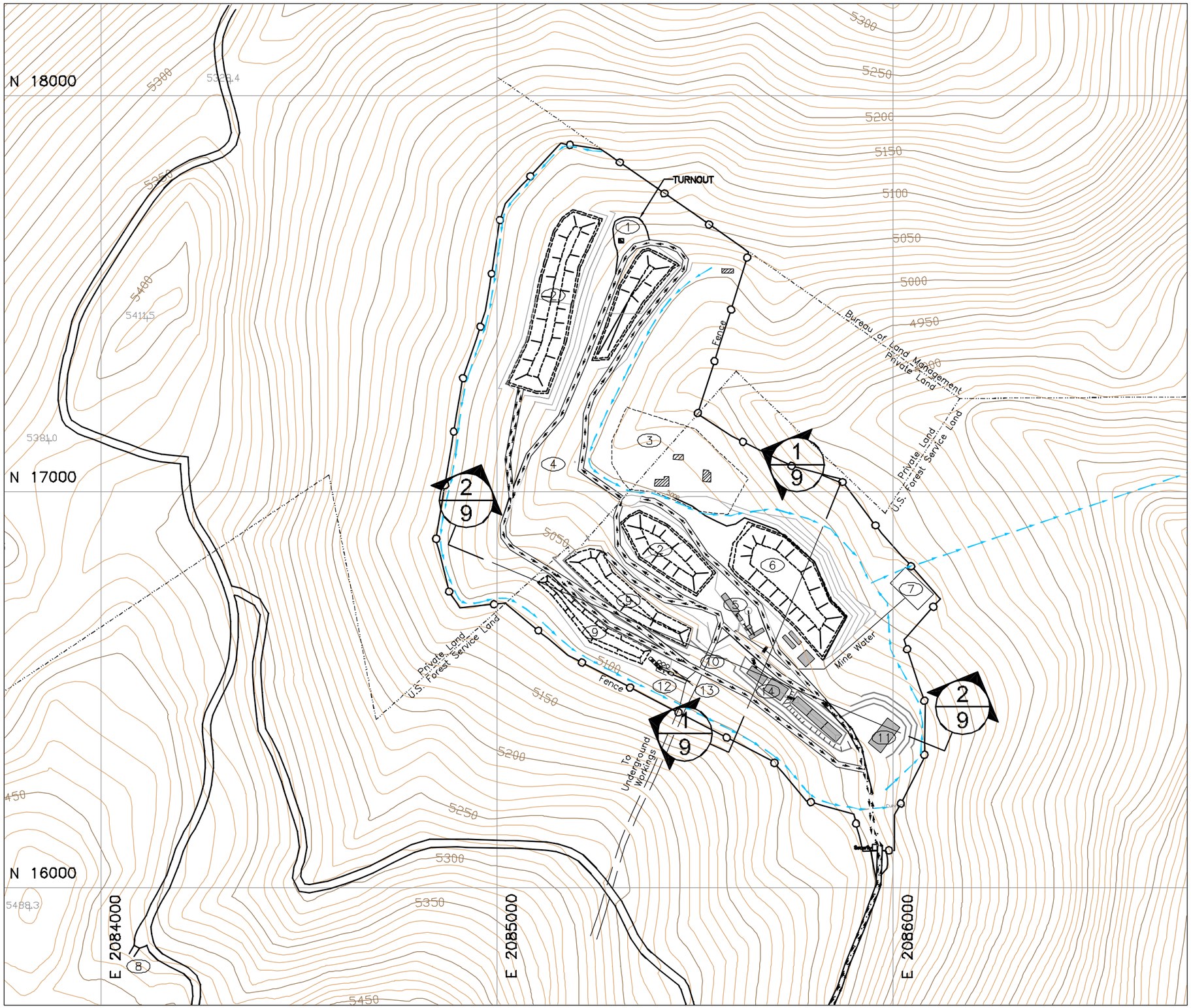

LEGEND

- PROPERTY LINES
- PROPOSED ROADS
- TRUCK TRAFFIC FLOW
- STORMWATER DIVERSION FLOW
- CULTURAL RESOURCE
- SECURITY FENCE

ID. NUMBER	FACILITY
1	Ventalation Raise
2	Temporary Development Rock Storage Area
3	Gold Axe Heritage Conservation Area
4	Water Well
5	Crushers
6	Temporary Ore Stockpile
7	Mine Effluent Water Treatment
8	Ventilation Portal
9	Backfill Storage
10	Portal
11	Shop
12	Backfill Plant
13	Cement Storage
14	Mine Offices/Facilities

Note: Surface cross sections shown on Figure 9.

250 0 250

1" = 250' Feet

PROJECT

BUCKHORN MOUNTAIN PROJECT
OKANOGAN CO., WASHINGTON

TITLE

MINE SITE LAYOUT

CROWN RESOURCES

FILE No.	0232002A033
SCALE AS SHOWN	REV. A

FIGURE 5

Dwg Name: N:\023-2002\0232002A033.dwg
Last Update: Aug 04, 2003 16:03 By:
Last Plot: Aug 04, 2003 16:11 By: mjuneau
Machine: CAD_Juneau

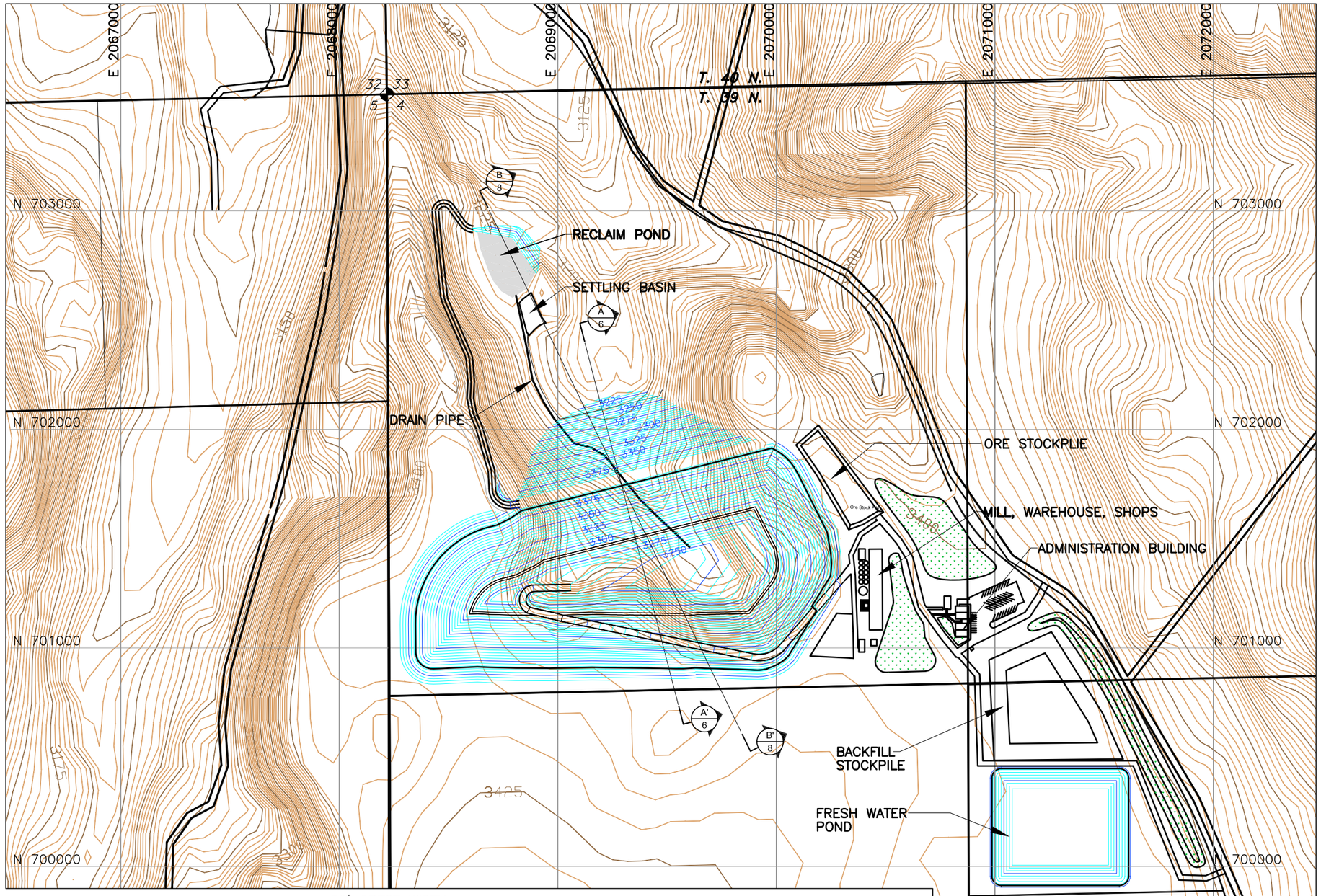

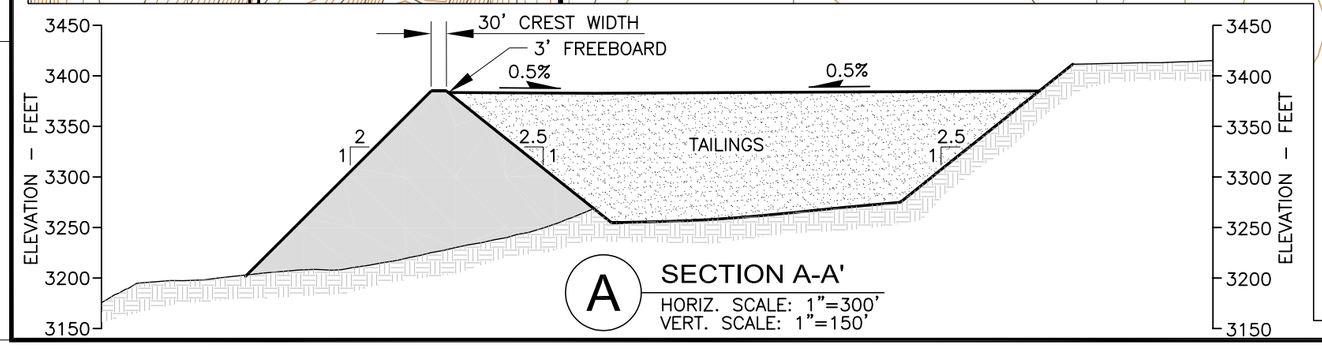

A SECTION A-A'

HORIZ. SCALE: 1"=300'
VERT. SCALE: 1"=150'

LEGEND

- EXISTING GROUND CONTOURS
- 3390 PROPOSED IMPOUNDMENT CONTOURS
- EXISTING ROAD
- SECTION LINE
- TOPSOIL STORAGE/VISUAL SCREEN

500 0 500

1" = 500 Feet

NOTES:
1. REFER TO FIGURE 8 FOR MILL SITE DETAIL.
2. CROSS SECTION B–B ON FIGURE 8.

PROJECT
BUCKHORN MOUNTAIN PROJECT
OKANOGAN COUNTY, WASHINGTON

TITLE
MILL/TDF LOCATION MAP

CROWN RESOURCES

FILE No. 0232002A034
SCALE AS SHOWN REV. A

FIGURE 6

Dwg Name: N:\023-2002\0232002A034.dwg
Last Update: Jul 31, 2003 16:06 By:
Last Plot: Jul 31, 2003 17:22 By: GLewan
Machine: OA_Jumbo

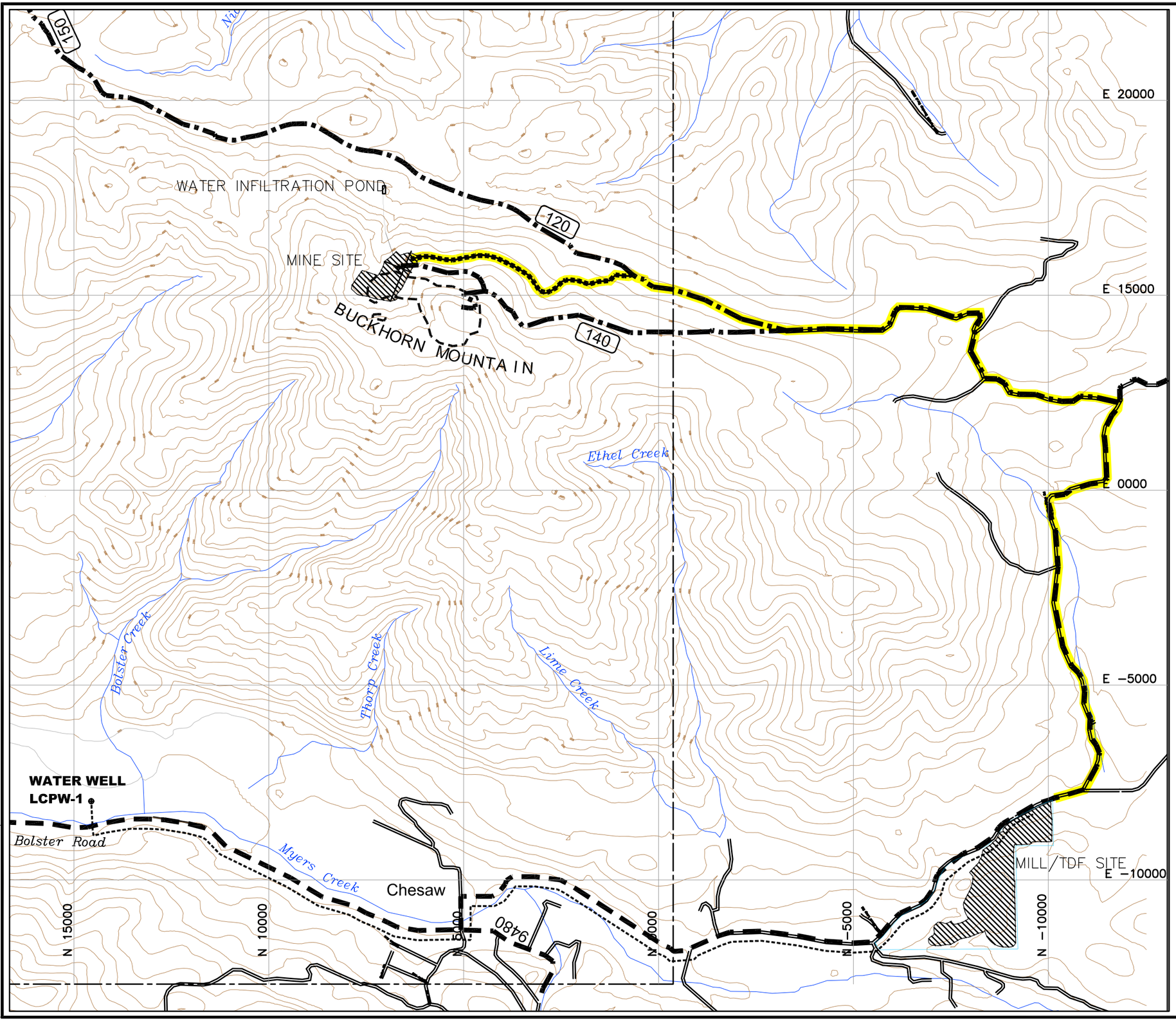

LEGEND

- USFS ROADS
- COUNTY ROADS
- OTHER ROADS
- PROPOSED ACCESS ROUTE
- PROPOSED NEW ROAD CONSTRUCTION
- 3575 ROAD DESIGNATION
- FACILITY
- WATER PIPELINE
- WATER WELL

Scale in Feet

0 1250 2500 5000

1" = 2500 feet

PROJECT

BUCKHORN MOUNTAIN PROJECT
OKANOGAN, CO., WASHINGTON

TITLE

FACLITIES LOCATIONS MAP

CROWN RESOURCES

FILE No.	0232002A035
SCALE AS SHOWN	REV. B

FIGURE 7

Dwg Name: N:\023-2002\0232002A035.dwg
Last Update: Jul 31, 2003 15:08 By:
Last Plot: Jul 31, 2003 16:00 By: GLewan
Machine: CAD_Juneau

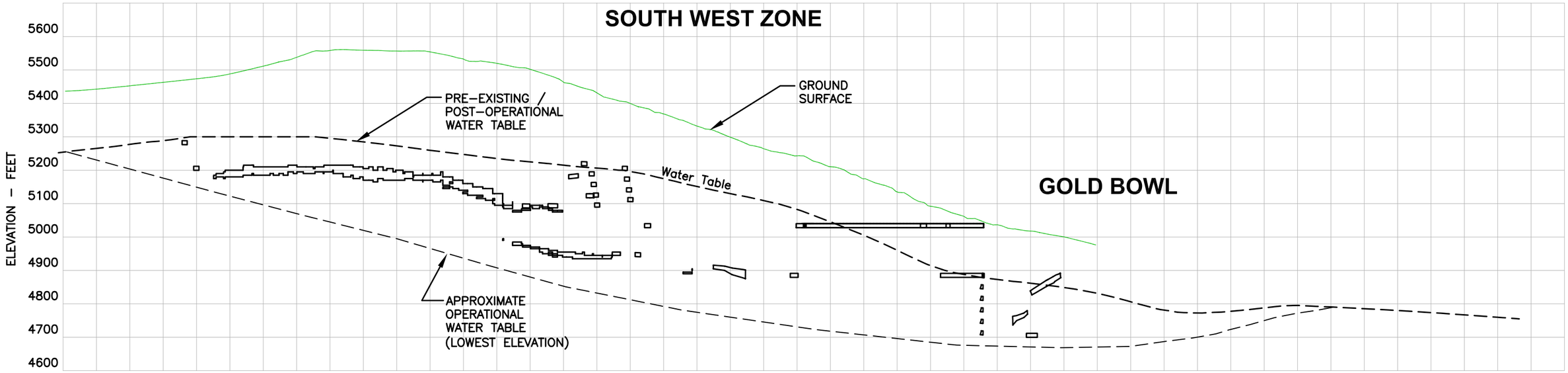

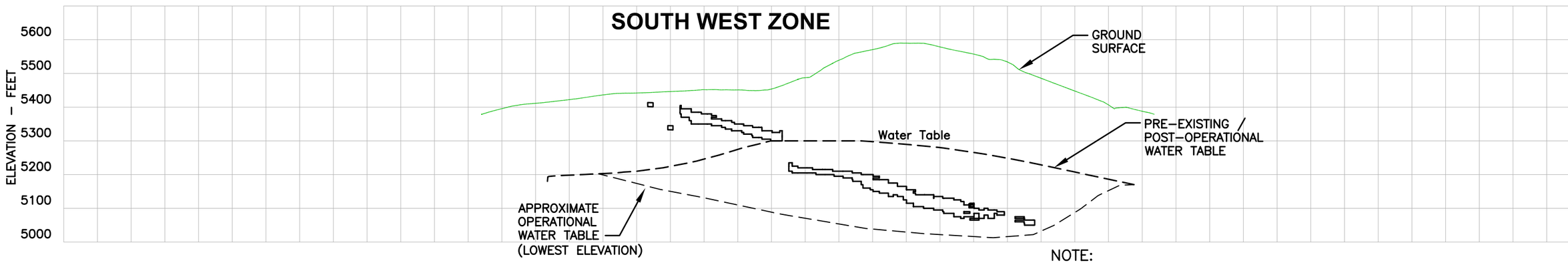

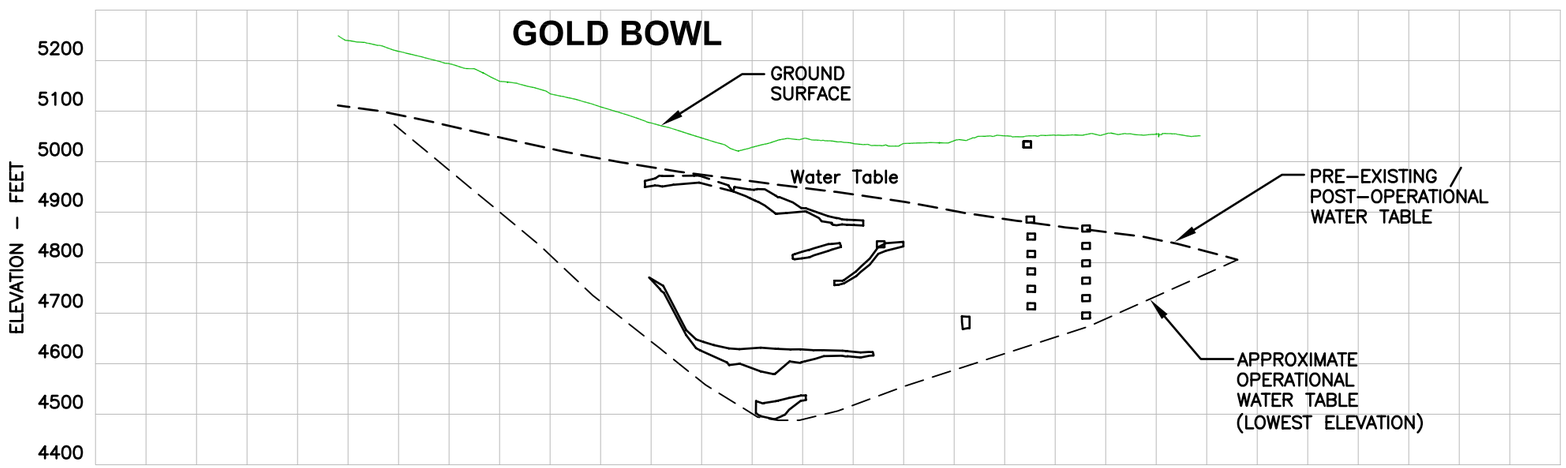

NOTE:

OPERATIONAL GROUNDWATER ELEVATIONS APPROXIMATED FROM GROUNDWATER MODEL RESULTS (APPENDIX B)

LEGEND

MINE WORKINGS

PROJECT

BUCKHORN MOUNTAIN PROJECT
OKANOGAN CO., WASHINGTON

TITLE

CROSS-SECTIONS SHOWING MINE WORKINGS AND WATER TABLES

CROWN RESOURCES

FILE No.	0232002A031
SCALE AS SHOWN	REV. A

FIGURE 8

Dwg Name: N:\023-2002\0232002A031.dwg
Last Update: Jul 31, 2003 15:07 By:
Last Plot: Jul 31, 2003 15:59 By: GLewan
Machine: CAD_Juneau

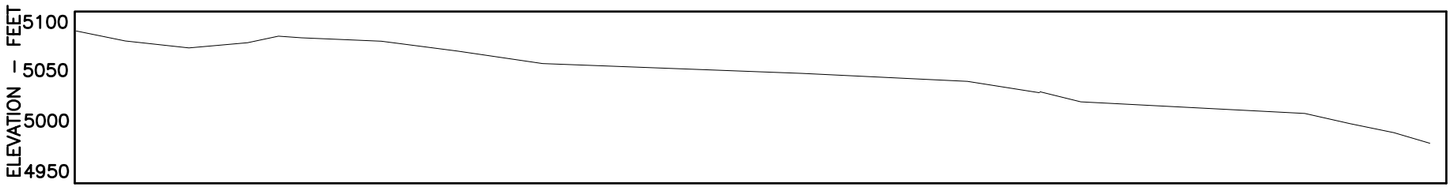

PRE-EXISTING TOPOGRAPHY

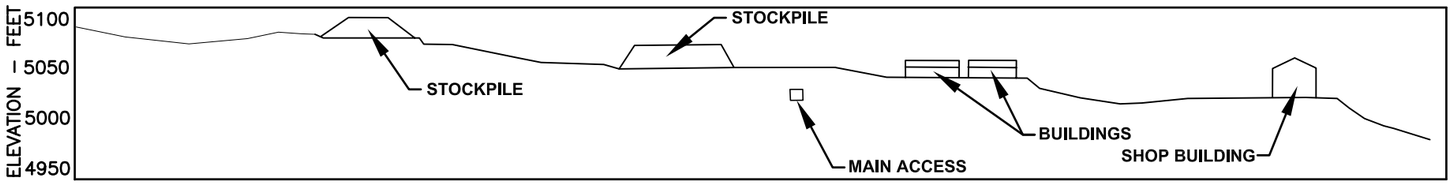

OPERATIONAL TOPOGRAPHY

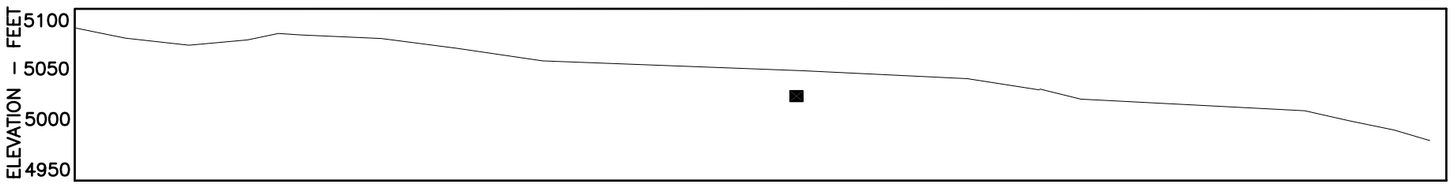

POST-RECLAMATION TOPOGRAPHY

1/9 SURFACE SECTION 1

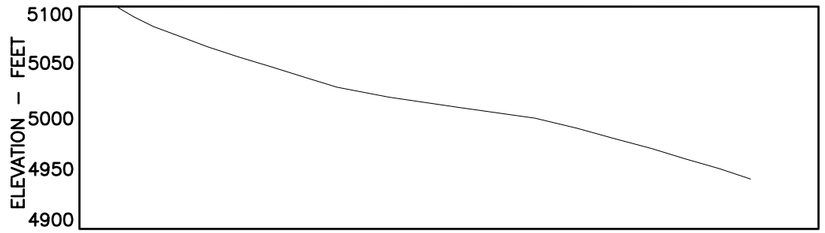

PRE-EXISTING TOPOGRAPHY

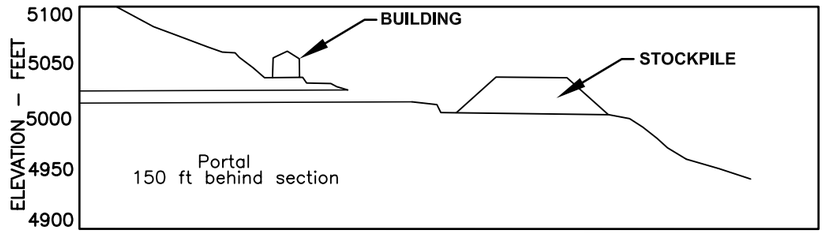

OPERATIONAL TOPOGRAPHY

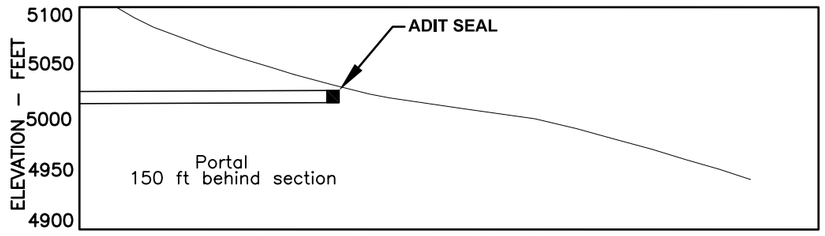

POST-RECLAMATION TOPOGRAPHY

2/9 SURFACE SECTION 2

Dwg Name: N:\023-2002\02320024032.dwg
Last Update: Jul 31, 2003 15:07 By:
Last Plot: Jul 31, 2003 15:58 By: GLewon
Machine: CAD_Juneau

PROJECT
BUCKHORN MOUNTAIN PROJECT
OKANOGAN CO., WASHINGTON

TITLE
MINE SITE CROSS-SECTIONS

CROWN RESOURCES

FILE No. 02320024032
SCALE AS SHOWN | REV. A

FIGURE 9

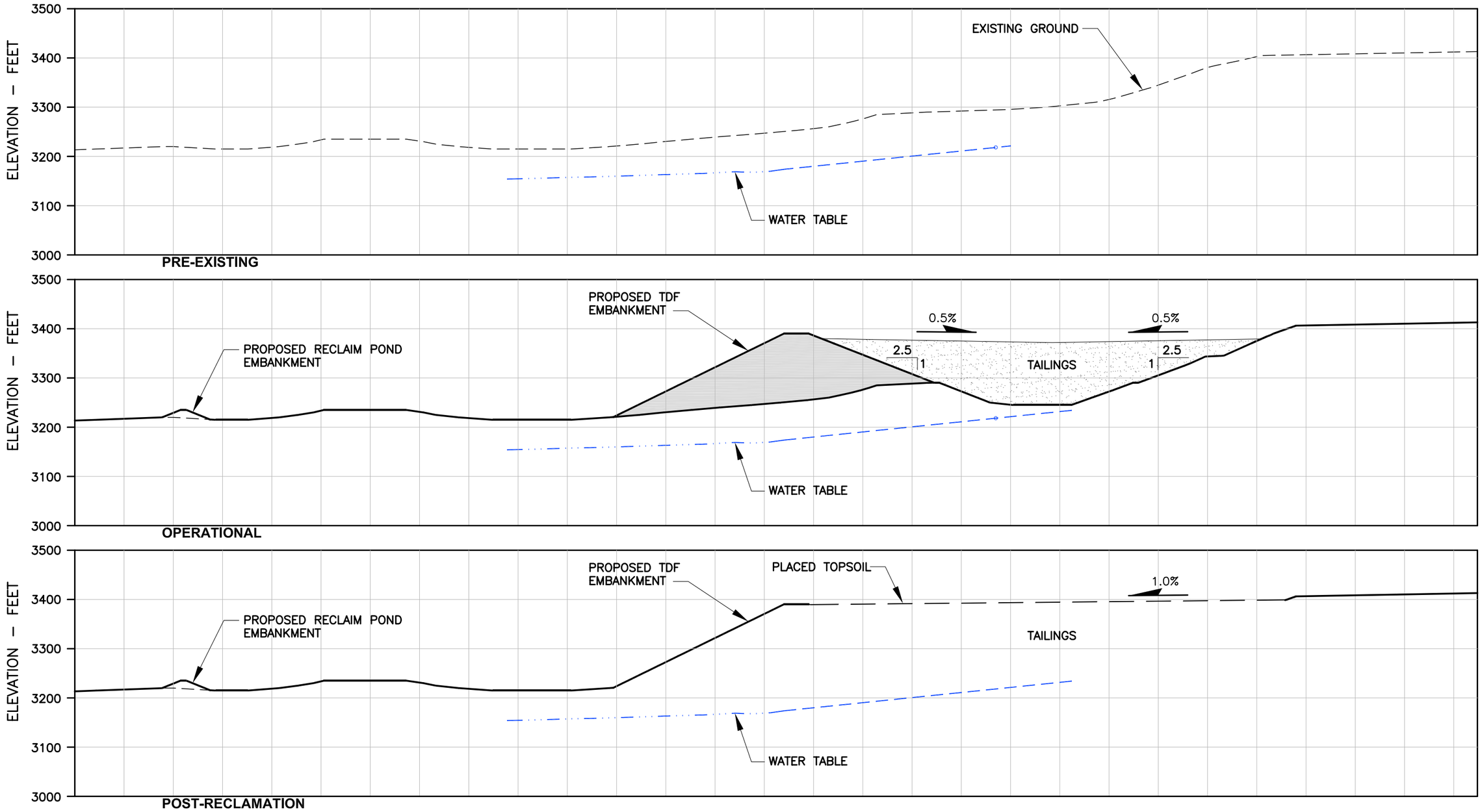

WATER TABLE LOCATION BASED ON GEOPHYSICAL SURVEY

PROJECT

BUCKHORN MOUNTAIN PROJECT
OKANOGAN COUNTY, WASHINGTON

TITLE

TDF CROSS SECTIONS

CROWN RESOURCES

FILE No. 0232002A030
SCALE AS SHOWN REV. A

FIGURE 10

Dwg Name: N:\023-2002\0232002A030.dwg
Last Update: Jul 31, 2003 16:21 By:
Last Plot: Jul 31, 2003 17:25 By: GLewan
Machine: CAD_Juneau

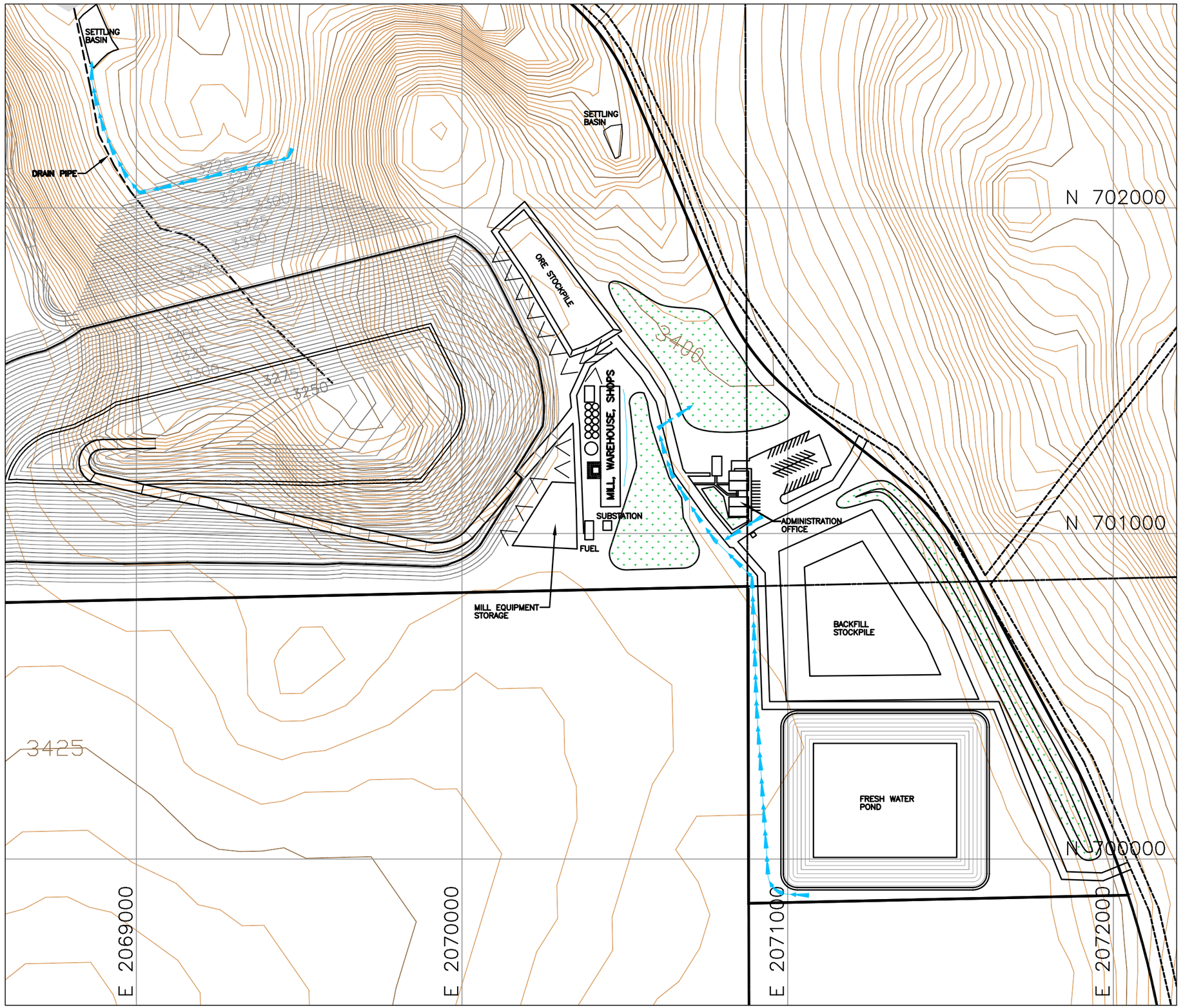

LEGEND

- EXISTING GROUND CONTOURS
- 3390 PROPOSED IMPOUNDMENT CONTOURS
- EXISTING ROAD
- SECTION LINE
- SURFACE WATER DIVERSION CHANNELS WITH DIRECTION OF FLOW
- TOPSOIL STORAGE/VISUAL SCREENS
- PROPERTY LINE
- GRADED FOR POSITIVE DRAINAGE

300 0 300
1" = 300 Feet

PROJECT
BUCKHORN MOUNTAIN PROJECT
OKANOGAN COUNTY, WASHINGTON

TITLE
MILL SITE WITH SURFACE WATER DIVERSIONS

CROWN RESOURCES

FILE No. 0232002A036
SCALE AS SHOWN REV. A

FIGURE 11

Dwg Name: N:\023-2002\0232002A036.dwg
Last Update: Jul 31, 2003 16:08 By:
Last Plot: Jul 31, 2003 17:26 By: GLewan
Machine: CAD_Juneau

Dwg Name: N:\023-2002\0232002A037.dwg
Last Update: Jul 31, 2003 15:05 By:
Last Plot: Jul 31, 2003 15:35 By: GLewan
Machine: CAD_Juneau

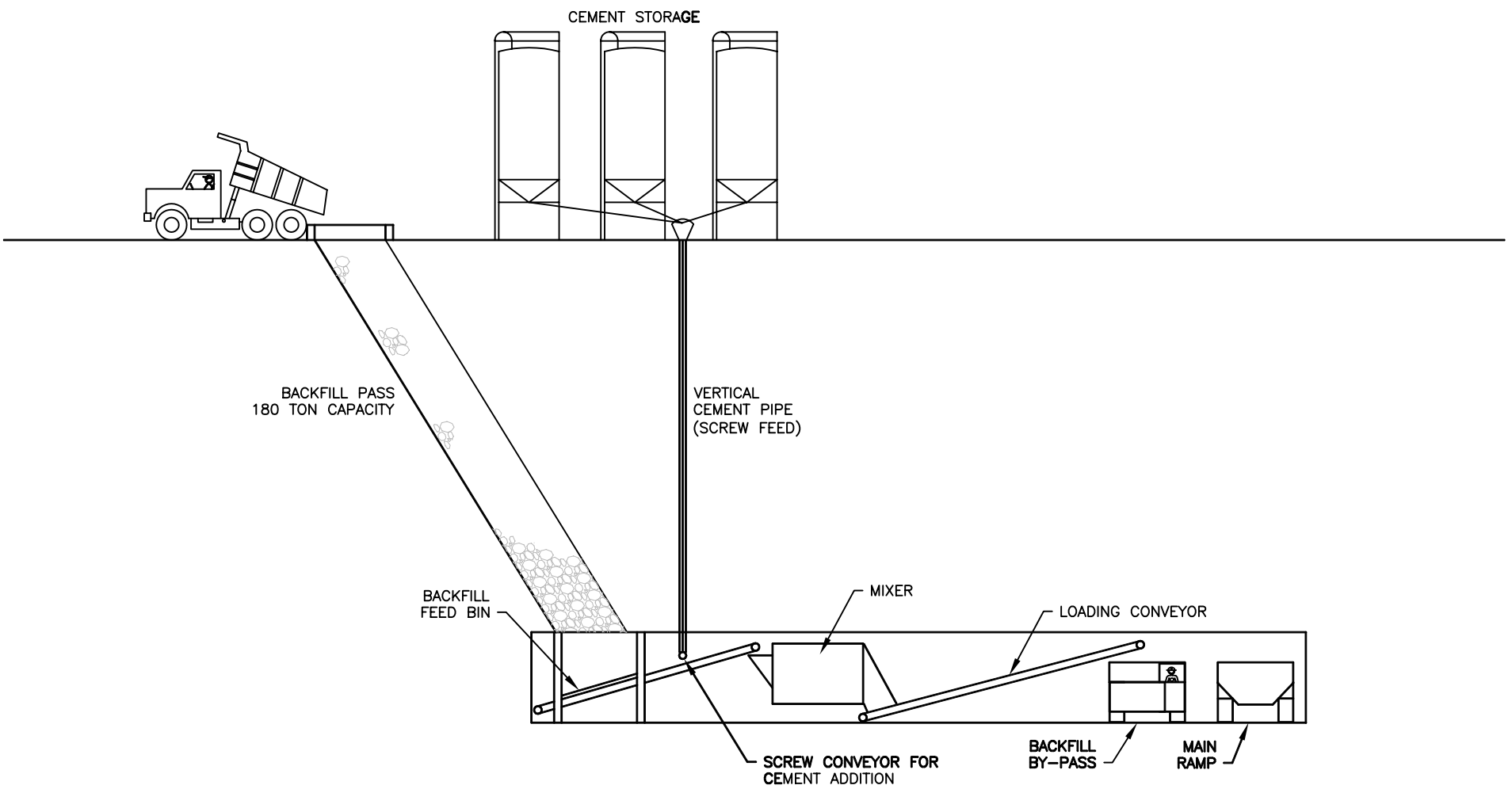

PROJECT

BUCKHORN MOUNTAIN PROJECT
OKANOGAN CO., WASHINGTON

TITLE

UNDERGROUND BACKFILL FACILITY

CROWN RESOURCES

FILE No.	0232002A037
SCALE AS SHOWN	REV. B

FIGURE 12

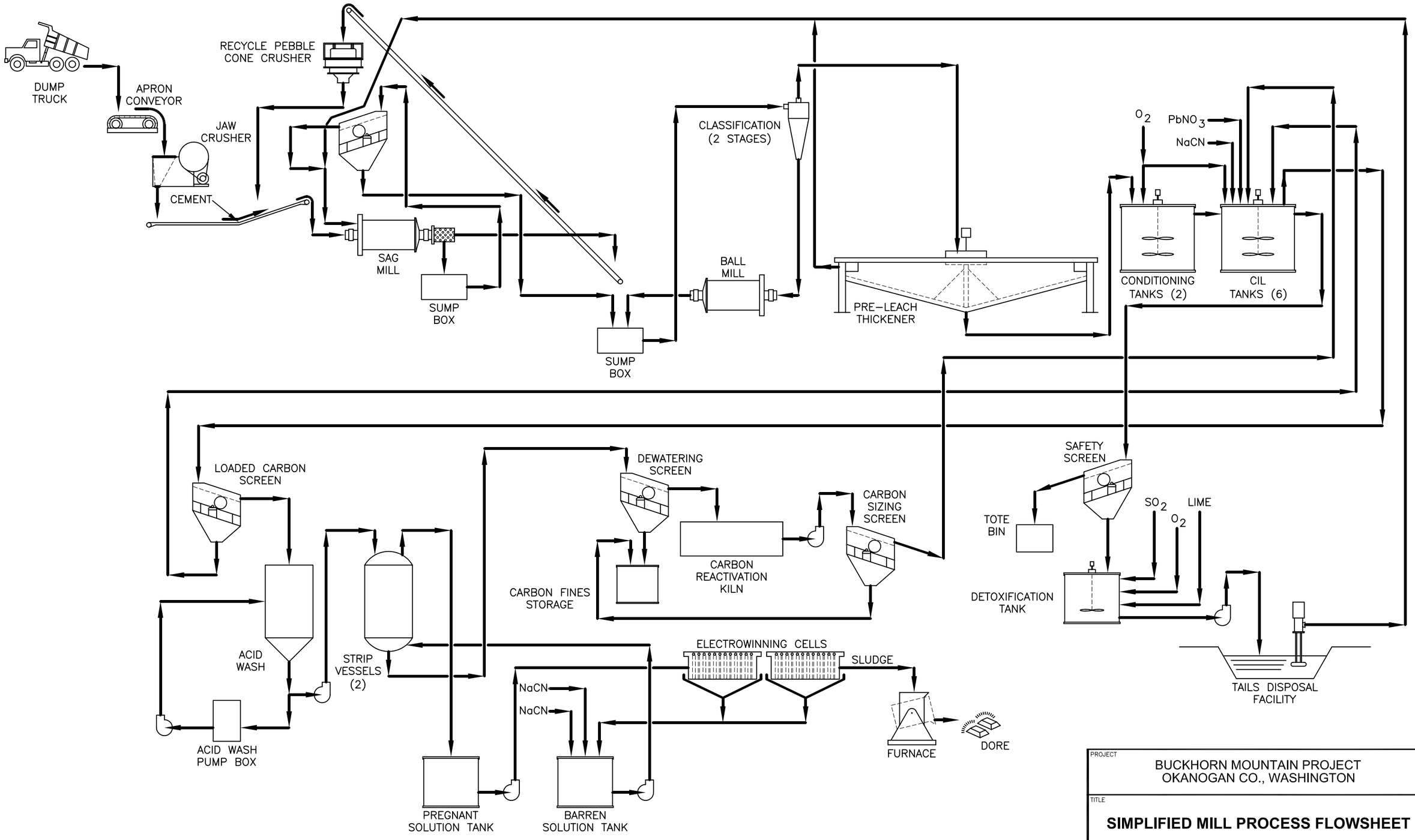

PROJECT

BUCKHORN MOUNTAIN PROJECT
OKANOGAN CO., WASHINGTON

TITLE

SIMPLIFIED MILL PROCESS FLOWSHEET

CROWN RESOURCES

FILE No.	0232002A038
SCALE AS SHOWN	REV. A

FIGURE 13

Dwg Name: N:\023-2002\0232002A038.dwg
Last Update: Jul 31, 2003 15:05 By:
Last Plot: Jul 31, 2003 15:54 By: GLewan
Machine: CAD_Juneau

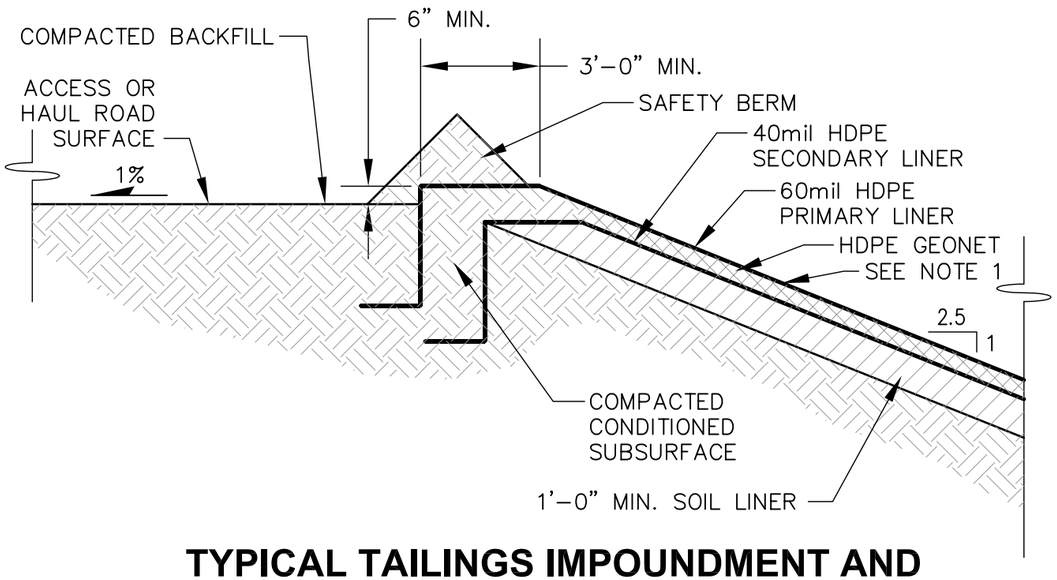

TYPICAL TAILINGS IMPOUNDMENT AND RECLAIM POND LINER ANCHOR DETAIL

N.T.S.

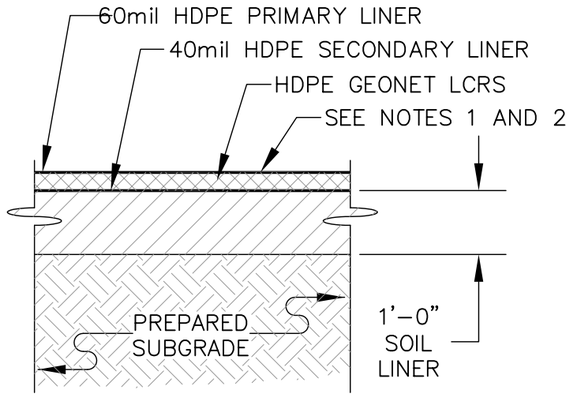

TYPICAL TAILINGS IMPOUNDMENT AND RECLAIM POND LINER DETAIL

N.T.S.

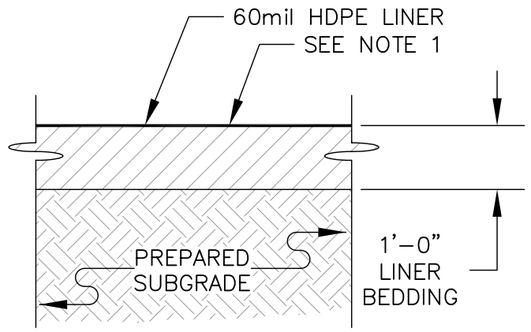

TYPICAL FRESHWATER POND LINER DETAIL

N.T.S.

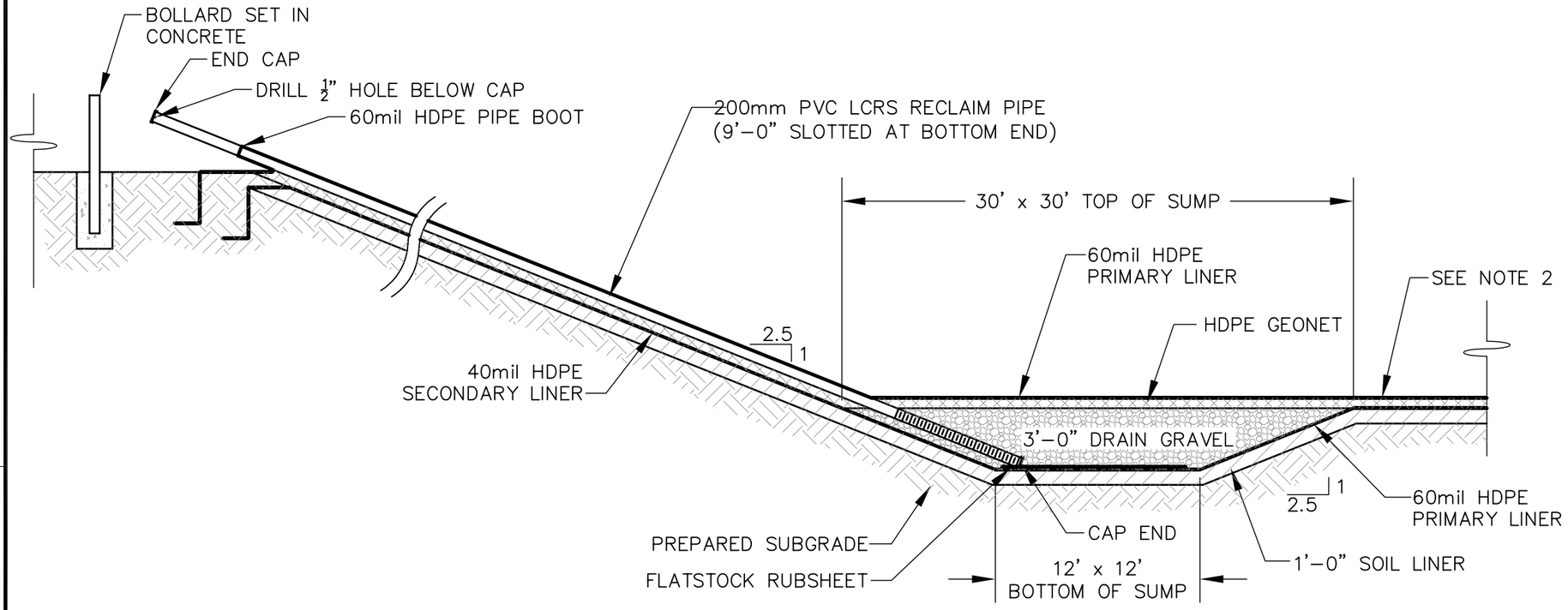

TYPICAL TAILINGS IMPOUNDMENT AND RECLAIM POND LCRS SUMP SECTION

N.T.S.

NOTES

1. SUITABLE BALLAST WILL BE PROVIDED TO PREVENT WIND DAMAGE.
2. PERMEABLE OVERLINER STRIP DRAINS WILL BE PROVIDED ON THE BASIN FLOOR OF THE TAILINGS IMPOUNDMENT TO MINIMIZE HYDRAULIC HEAD ON THE LINER SYSTEM.

PROJECT
BUCKHORN MOUNTAIN PROJECT
OKANOGAN CO., WASHINGTON

TITLE
TDF LINER DETAILS

CROWN RESOURCES

FILE No. 0232002A039
SCALE AS SHOWN | REV. A

FIGURE 14

Dwg Name: N:\023-2002\0232002A039.dwg
Last Update: Jul 31, 2003 15:06 By:
Last Plot: Jul 31, 2003 15:56 By: GLewan
Machine: CAD_Lumina

Dwg Name: N:\023-2002\0232002A040.dwg
Last Update: Jul 31, 2003 15:07 By:
Last Plot: Jul 31, 2003 15:57 By: GLewan
Machine: CAD_Juneau

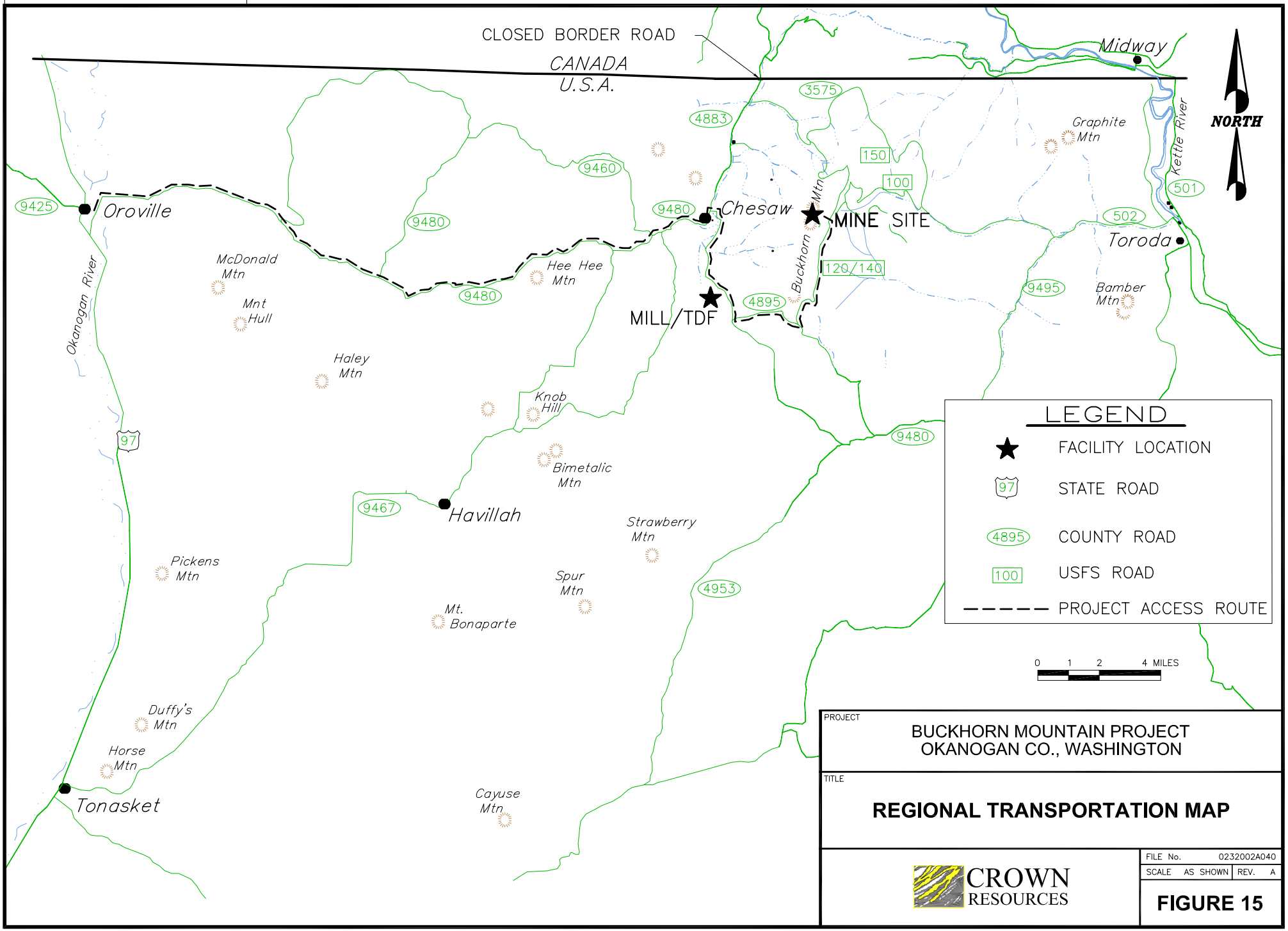

PROJECT

BUCKHORN MOUNTAIN PROJECT
OKANOGAN CO., WASHINGTON

TITLE

REGIONAL TRANSPORTATION MAP

CROWN RESOURCES

FILE No. 0232002A040
SCALE AS SHOWN REV. A

FIGURE 15