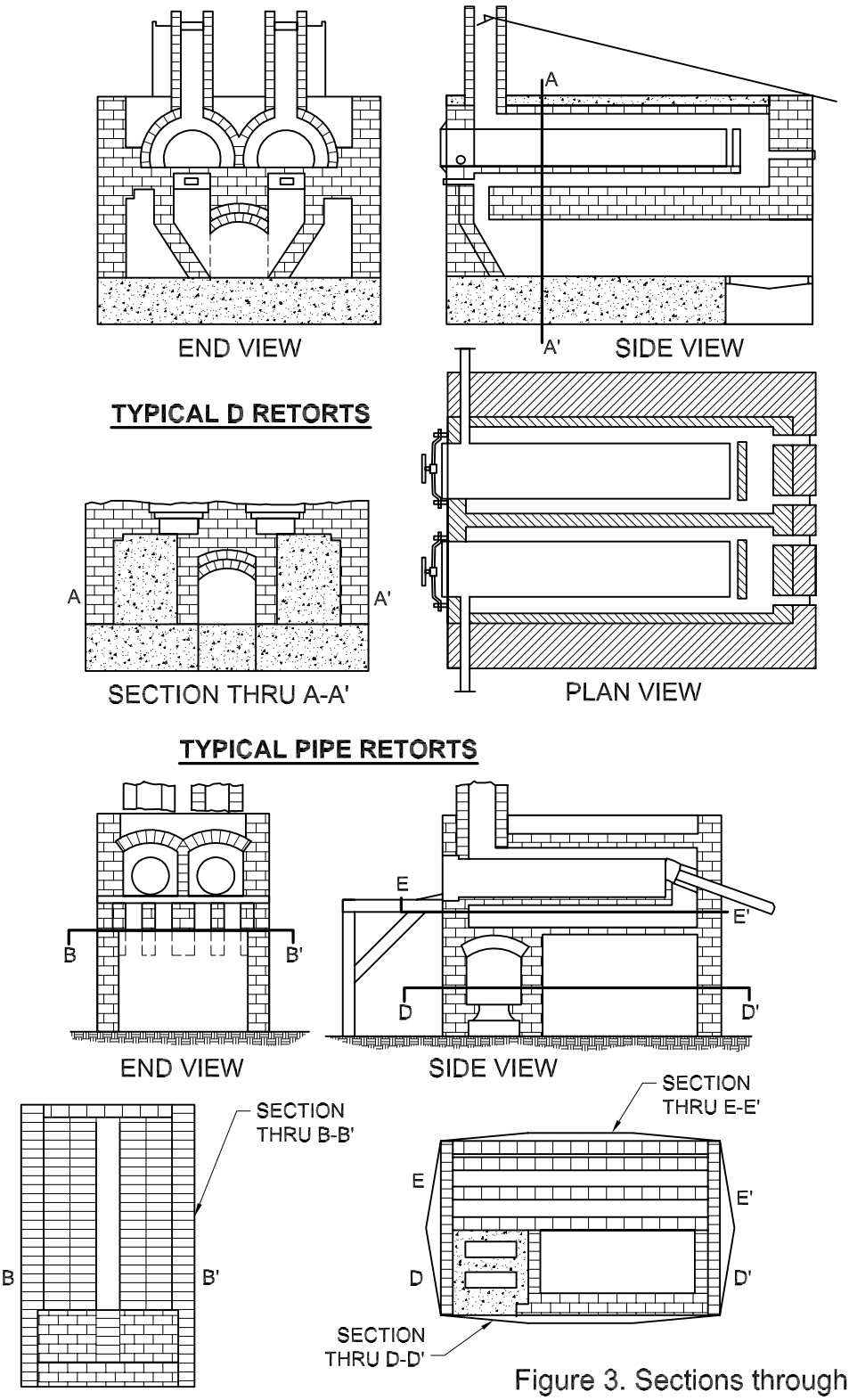

Figure 3. Sections through Typical D-Type Retorts and Pipe Retorts

0 6 FEET

SCALE
(LOCATIONS ARE APPROXIMATE)

PROJECT NUMBER: 2010045	ROBA WESTFALL MINE
DATE: 2/20/01	
DWG BY: DJM / DWG NO: 2010045F3	U.S. FOREST SERVICE MALHEUR NATIONAL FOREST
PROJECT MANAGER: KU	
REVISED:	CASCADE EARTH SCIENCES A Valmont Industries Company