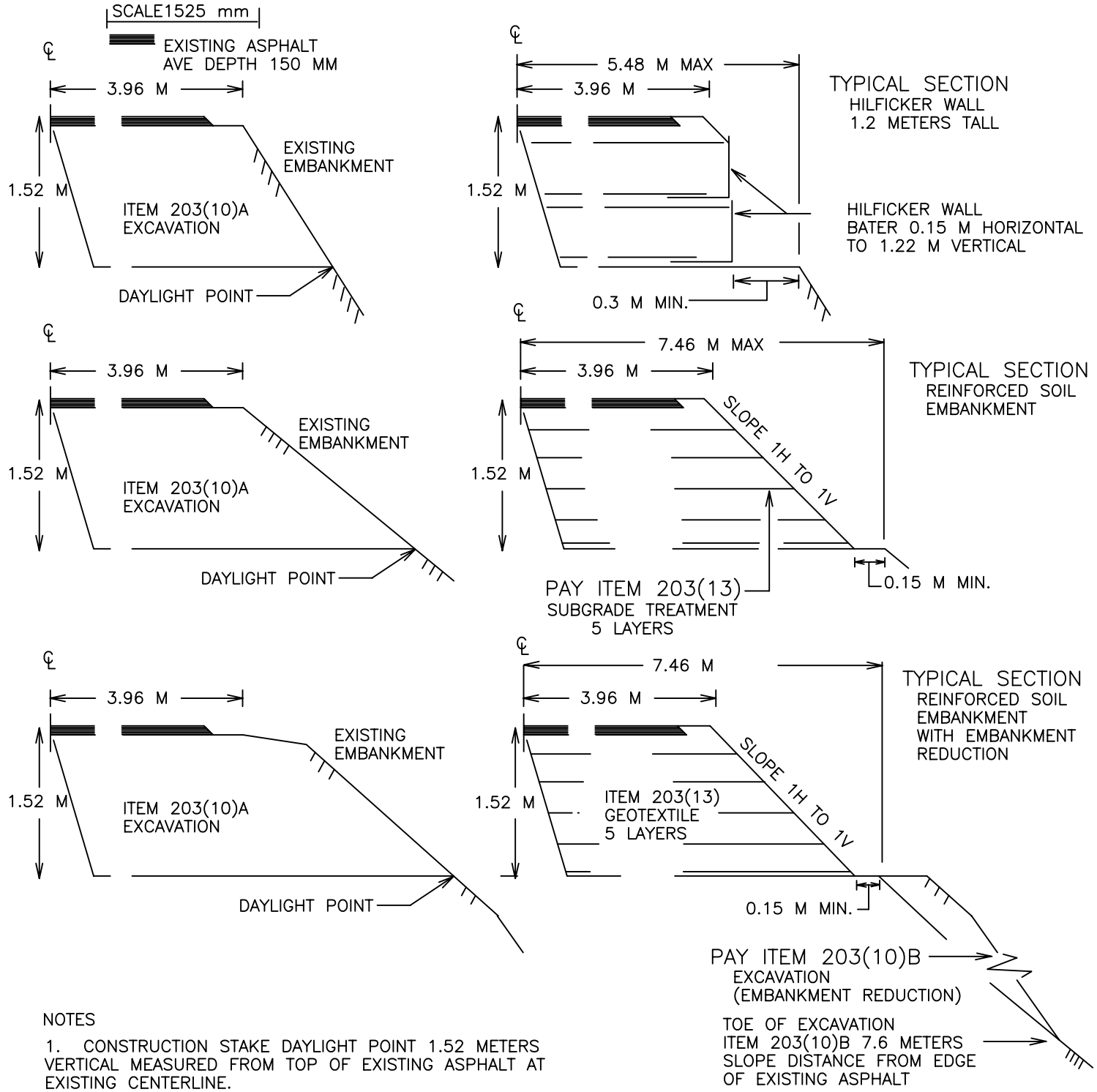

NOTES

1. CONSTRUCTION STAKE DAYLIGHT POINT 1.52 METERS VERTICAL MEASURED FROM TOP OF EXISTING ASPHALT AT EXISTING CENTERLINE.
2. SAW CUT EXISTING ASPHALT AT CENTERLINE, BEGINNING AND END OF WORK AREA. COMPLETE EXCAVATION PAY ITEMS 203(10)A AND 203(10)B UNSUITABLE.
3. CONSTRUCT HILFICKER WALL OR REINFORCED SOIL EMBANKMENT UTILIZING PAY ITEM 304(10)A (50 MM MINUS CRUSHED ROCK) FOR EMBANKMENT MATERIAL.
4. PLACE (2) COMPACTED LIFTS OF PAY ITEM 304(13) (GOV FURNISHED CRUSHED ROCK) ON TOP OF TOP LAYER OF GEOGRID OR HILFICKER TIE-BACK MATTS.
5. PLACE 100 MM COMPACTED LIFT OF PAY ITEM 403(01) HOT MIX ASPHALT. NEW ASPHALT SURFACE WIDTH 3.65 M, SHOULDER WIDTH 300 MM.

K:/fh_eng/mcez/DEAN99/typicalsection.dwg

TYPICAL DETAIL	DEPARTMENT OF AGRICULTURE FOREST SERVICE GIFFORD PINCHOT NATIONAL FOREST	99 ROAD MAINTENANCE SHEET 9 OF 22

STEP 1

PLACE THE FIRST COURSE OF SOIL REINFORCEMENT MATS ON PREPARED FOUNDATION

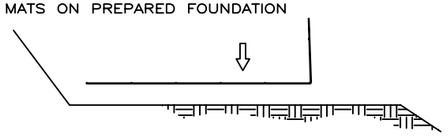

STEP 2

PLACE THE BACKING MAT AGAINST THE INSIDE FACE OF THE SOIL REINFORCEMENT MAT. CLIP THE SECOND–TO–TOP TRANSVERSE WIRE ON THE BACKING MAT TO THE TOP TRANSVERSE WIRE ON THE SOIL REINFORCEMENT MAT

INSTALL CONTINUOUS HARDWARE CLOTH OR FILTER FABRIC, HOG–RING TO THE TOP WIRE ON THE BACKING MAT

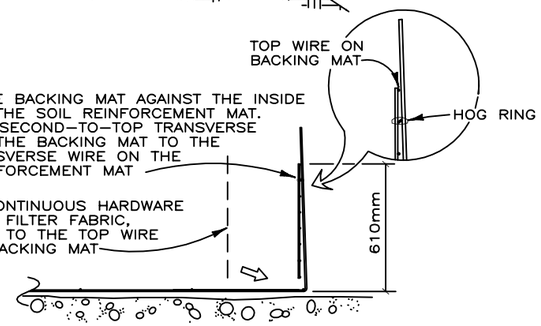

STEP 3

PLACE AND COMPACT THE BACKFILL IN LAYERS AND DENSITITES AS SPECIFIED IN THE PROJECT PLANS. LEAVE A VOID AT THE FACE AS SHOWN.

PLACE THE SECOND COURSE OF SOIL REINFORCEMENT MATS WITH THE BASE LONGITUDINAL WIRES RESTING ON THE TOP TRANSVERSE WIRE OF THE BACKING MAT BELOW. SLIDE THE SOIL REINFORCEMENT MAT INTO ALIGNMENT

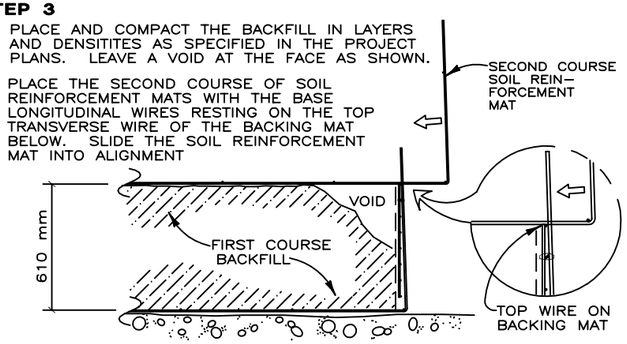

STEP 4

HOOK THE BOTTOM TRANSVERSE WIRE OF THE BACKING MAT OVER THE VERTICAL PRONGS ON THE LOWER MAT. ROTATE THE BACKING MAT TO VERTICAL AND CLIP THE SECOND–TO–TOP TRANSVERSE WIRE ON THE BACKING MAT TO THE TOP WIRE ON THE SOIL REINFORCEMENT MAT.

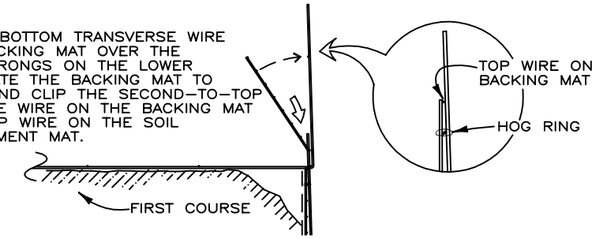

STEP 5

INSTALL THE HARDWARE CLOTH OR FILTER FABRIC.

PLACE AND COMPACT THE BACKFILL TO THE BASE ELEVATION OF THE NEXT MAT.

REPEAT STEPS 3 THRU 5 TO THE TOP LIFT.

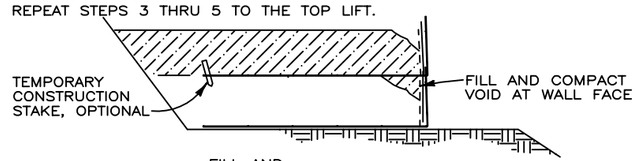

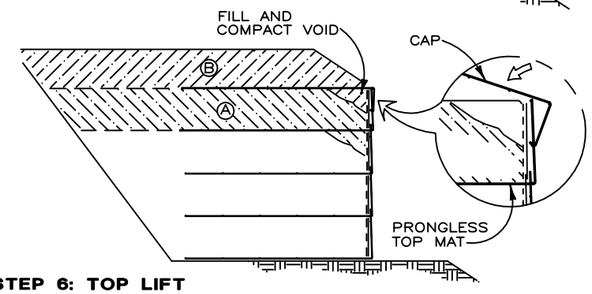

STEP 6: TOP LIFT

PLACE THE TOP LIFT PRONGLESS MAT, BACKING MAT AND HARDWARE CLOTH OR FILTER FABRIC.

PLACE AND COMPACT BACKFILL IN AREA "A"

HOOK THE CAP OVER THE MIDDLE TRANSVERSE WIRE ON THE PRONGLESS MAT, AND ROTATE INTO PLACE

BACKFILL "B" TO 457mm MINIMUM COVER OVER THE CAP.

CONSTRUCTION SEQUENCE

NOT TO SCALE

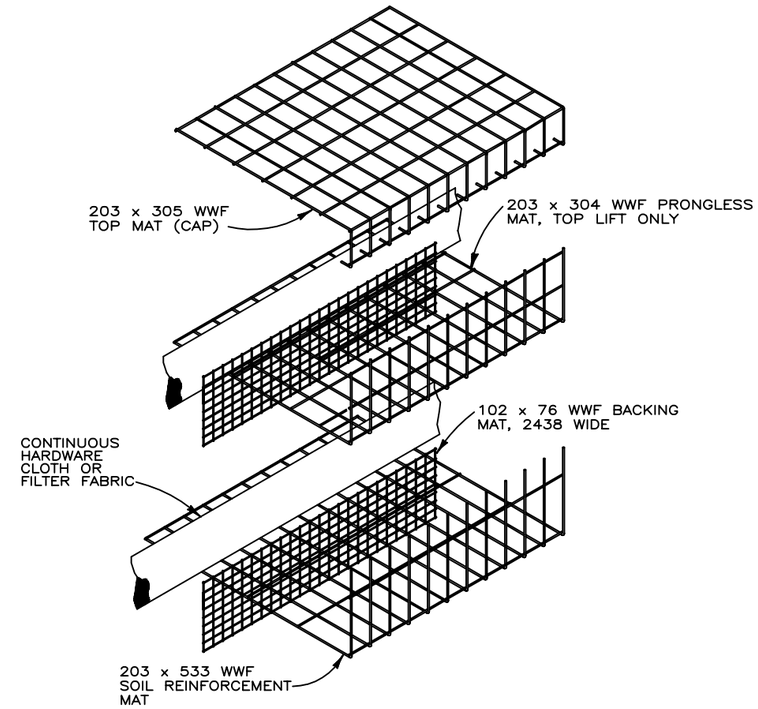

WALL COMPONENTS

NOT TO SCALE

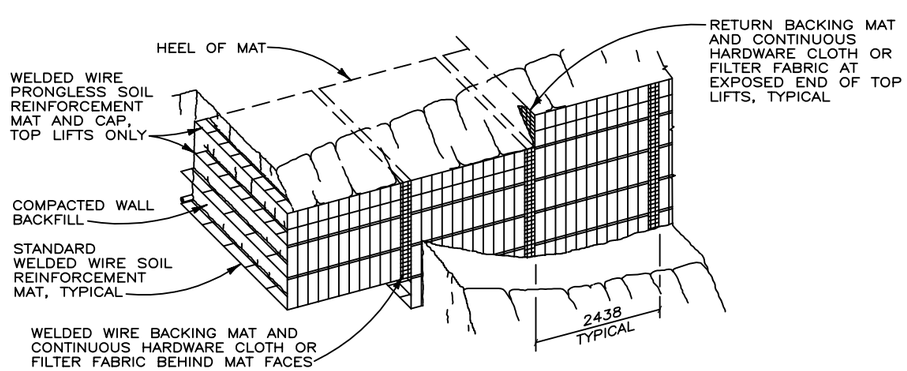

PICTORIAL ELEVATION

NOT TO SCALE

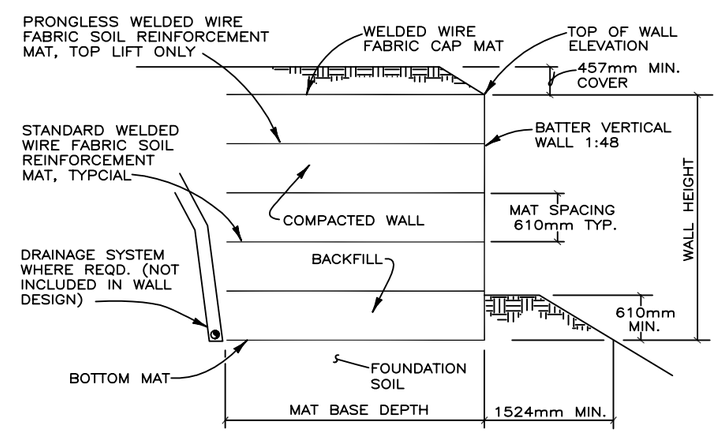

TYPICAL SECTION

NOT TO SCALE

THIS DRAWING IS FURNISHED SOLELY FOR THE USE OF OR IN CONNECTION WITH THIS PROJECT, AND THE PROPRIETARY INFORMATION SHOWN HEREON IS NOT TO BE TRANSMITTED TO ANY OTHER ORGANIZATION WITHOUT SPECIFIC AUTHORIZATION BY THE HILFIKER COMPANY. HILFIKER RETAINING WALLS ARE PROTECTED BY ONE OR MORE OF THE FOLLOWING PATENTS: 3,631,682, 4,117,686, 4,260,296, 4,329,089, 4,324,508, 4,343,572, 4,391,557, 4,505,621, 4,616,959, 4,643,618, 4,661,023, 4,856,939, 5,733,072 AND OTHERS PENDING.

REV.NO.	DATE	BY	DESCRIPTION
1	9 OCT 00	DR	REVISE TO METRIC STANDARD
2	12APR02	DR	REVISE BORDER

GRAPHIC SCALE

LINE IS 5 UNITS LONG ON ORIGINAL DRAWING

0 5

PROJ.MGR.

ENGINEER

CADD BY DR

HILFIKER RETAINING WALLS
3900 Broadway Eureka, CA 95503
P.O. Box 2012 Eureka, CA 95501
707-443-5093 Fax 707-443-2891
Toll-Free 800-762-8962
Web: http://hilfiker.com email: info@hilfiker.com

1902-2002 100 YEARS HILFIKER COMPANY

DWG DATE 11/98

REVISION DATE 12 APR 02

SCALE NONE

STANDARD DRAWING

WELDED WIRE RETAINING WALL
610 mm LIFTS

DETAILS

PROJECT NO.

SHEET 1 OF 3

WWCFSTDM

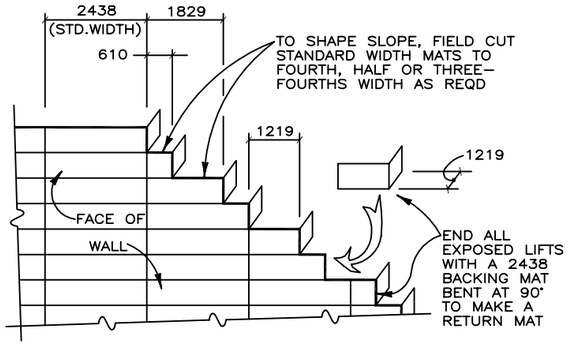

PARTIAL TOP MAT DETAILS
NOT TO SCALE
CAP MATS ARE NOT SHOWN FOR CLARITY

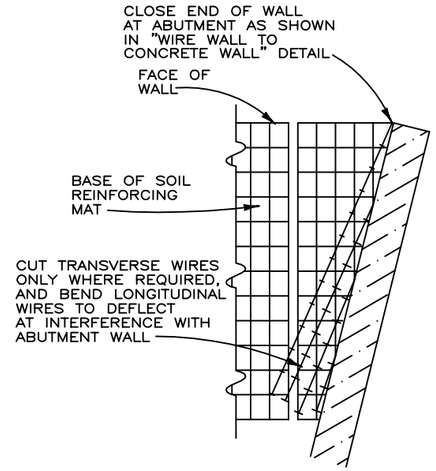

PLAN
DEFLECTED MATS AT OBSTRUCTION

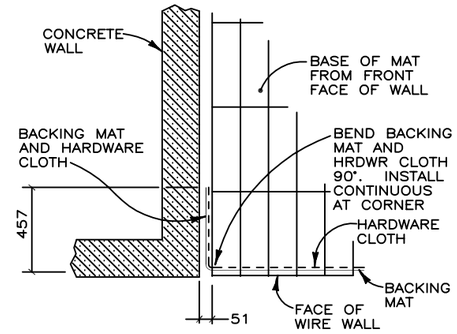

PLAN
WIRE WALL TO CONCRETE WALL
NOT TO SCALE

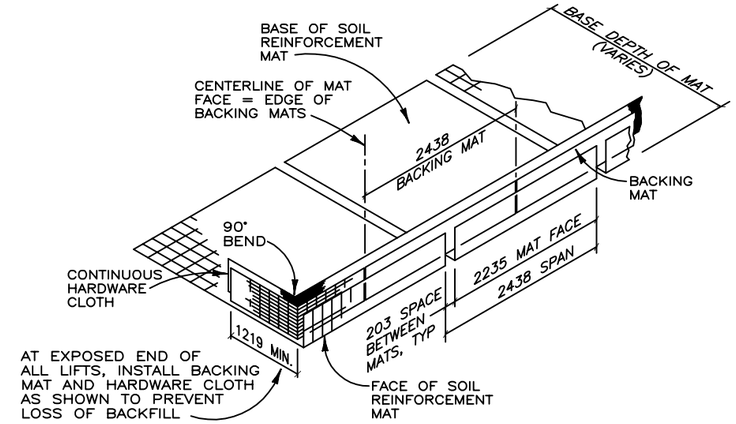

WALL COMPONENTS DETAIL
NOT TO SCALE

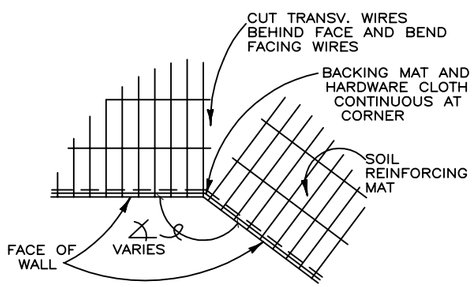

PLAN
CONCAVE ANGLE DETAIL
NOT TO SCALE

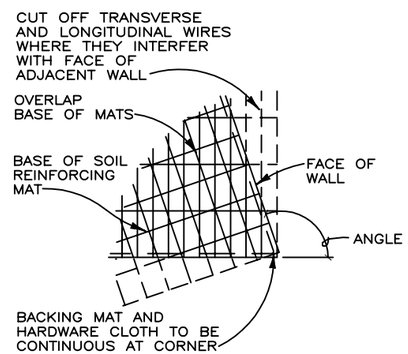

PLAN
CONVEX ANGLE DETAIL
NOT TO SCALE

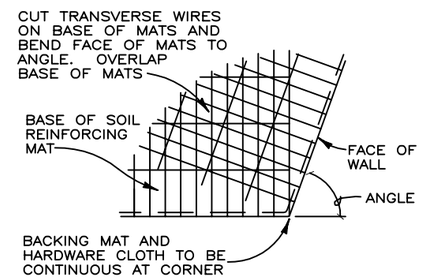

PLAN
CONVEX ANGLE DETAIL
NOT TO SCALE

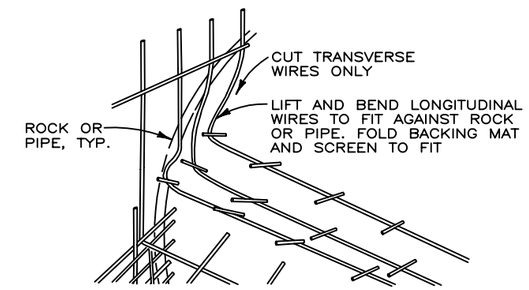

FITTING MATS TO OBSTRUCTION
NOT TO SCALE

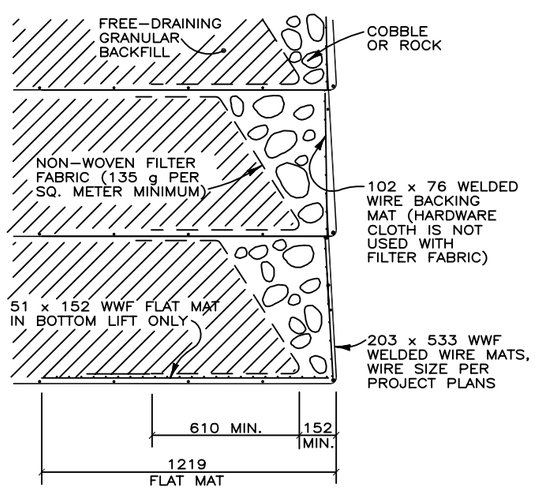

COBBLE FACING DETAIL (SECTION)
NOT TO SCALE

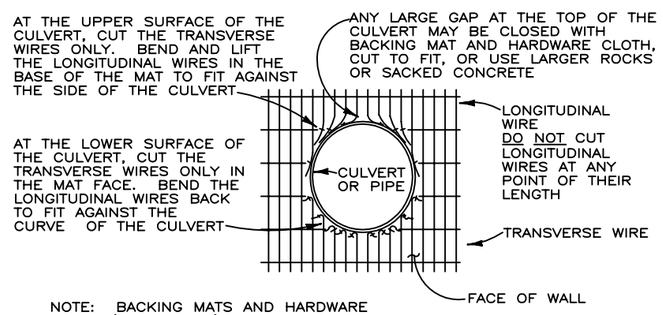

NOTE: BACKING MATS AND HARDWARE CLOTH (NOT SHOWN) ARE TO BE CUT OFF FLUSH WITH THE SIDES OF THE CULVERT

ELEVATION
CULVERT THRU WALL FACE
NOT TO SCALE

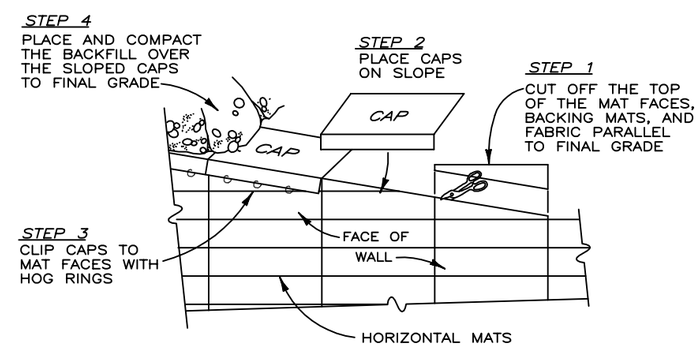

SLOPED CAP DETAIL
NOT TO SCALE

NOTES:

1. THESE DETAILS ARE OFFERED FOR INFORMATION ONLY. THEY MAY OR MAY NOT APPLY TO SPECIFIC PROJECTS.
2. THESE DETAILS SHOW HARDWARE CLOTH USED BEHIND THE BACKING MATS. IN SOME APPLICATIONS, FILTER FABRIC WILL BE REQUIRED INSTEAD OF HARDWARE CLOTH. IN THAT CASE, THESE DETAILS SHOULD BE REVISED ACCORDINGLY.

THIS DRAWING IS FURNISHED SOLELY FOR THE USE OF OR IN CONNECTION WITH THIS PROJECT, AND THE PROPRIETARY INFORMATION SHOWN HEREON IS NOT TO BE TRANSMITTED TO ANY OTHER ORGANIZATION WITHOUT SPECIFIC AUTHORIZATION BY THE HILFIKER COMPANY. HILFIKER RETAINING WALLS ARE PROTECTED BY ONE OR MORE OF THE FOLLOWING PATENTS: 3,631,682, 4,117,686, 4,260,296, 4,329,089, 4,324,508, 4,343,572, 4,391,557, 4,505,621, 4,616,959, 4,643,618, 4,661,023, 4,856,939, 5,733,072 AND OTHERS PENDING.

REV.NO.	DATE	BY	DESCRIPTION
1	4/12/02	DR	UPDATED BORDER

GRAPHIC SCALE
LINE IS 5 UNITS LONG ON ORIGINAL DRAWING
0 5

PROJ.MGR.
ENGINEER
CADD BY DR

HILFIKER RETAINING WALLS
3900 Broadway Eureka, CA 95503
P.O. Box 2012 Eureka, CA 95501
707-443-5093 Fax 707-443-2891
Toll-Free 800-762-8962
Web: http://hilfiker.com email: info@hilfiker.com

1902-2002 100 YEARS HILFIKER COMPANY

DWG DATE 28 MAR 01
REVISION DATE 12 APR 02
SCALE

STANDARD DRAWING
METRIC DIMENSIONS
WELDED WIRE RETAINING WALL
610m LIFTS
STANDARD DETAILS

PROJECT NO.
SHEET 2 OF 3

WWCFSTD2M.DWG

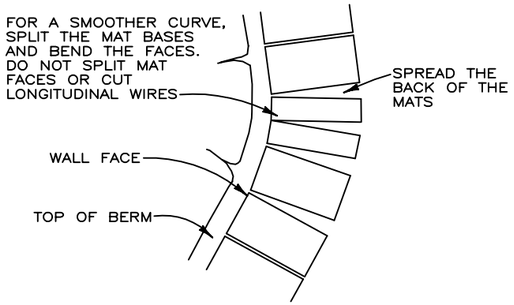

PLAN VIEW

CONCAVE CURVE DETAIL
NOT TO SCALE

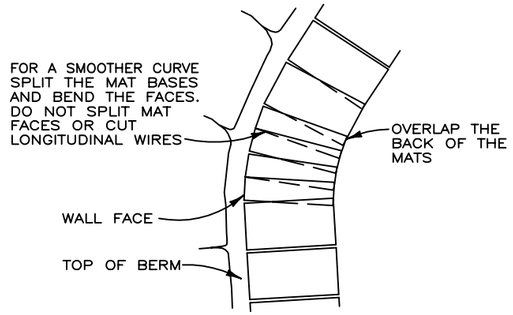

PLAN VIEW

CONVEX CURVE DETAIL
NOT TO SCALE

NOTES:
1. ALL GUARDRAIL POST HARDWARE SHALL BE HOT-DIP GALVANIZED.
2. CONCRETE FOR ANCHOR SHALL BE CLASS 3000.

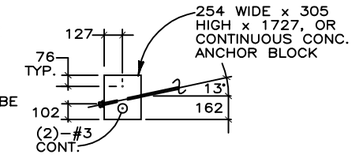

ANCHOR BLOCK DETAIL
NOT TO SCALE

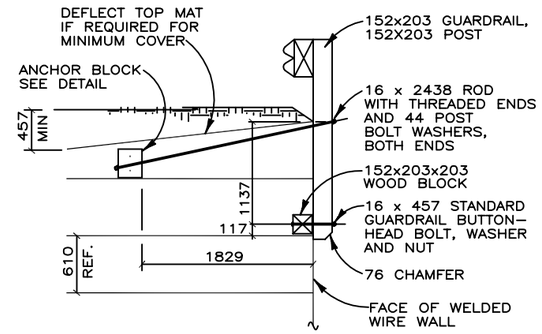

EXTERNALLY MOUNTED TYPE 1 GUARDRAIL
NOT TO SCALE

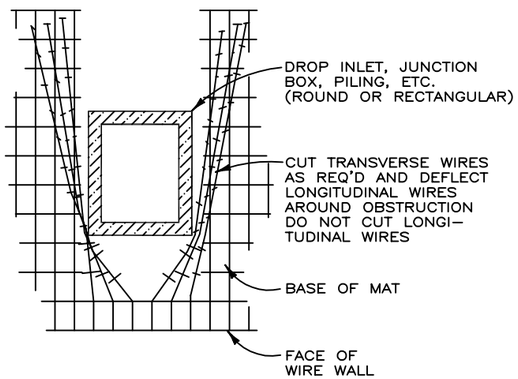

PLAN VIEW

MAT PENETRATION DETAIL
NOT TO SCALE

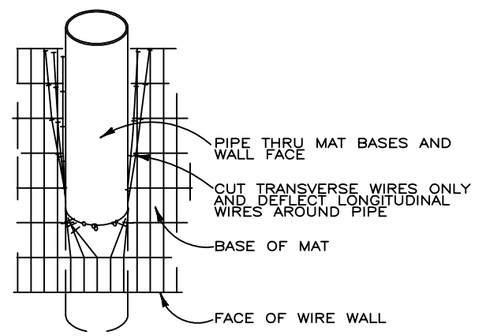

PLAN VIEW

PIPE ON ANGLE THRU MAT BASE
NOT TO SCALE

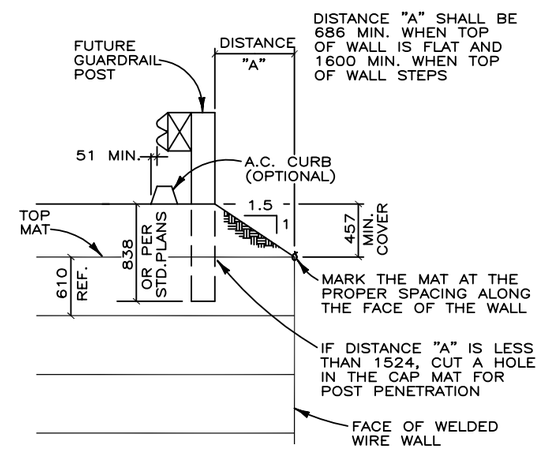

GUARDRAIL DETAIL
NOT TO SCALE
(FENCE DETAIL SIMILAR)

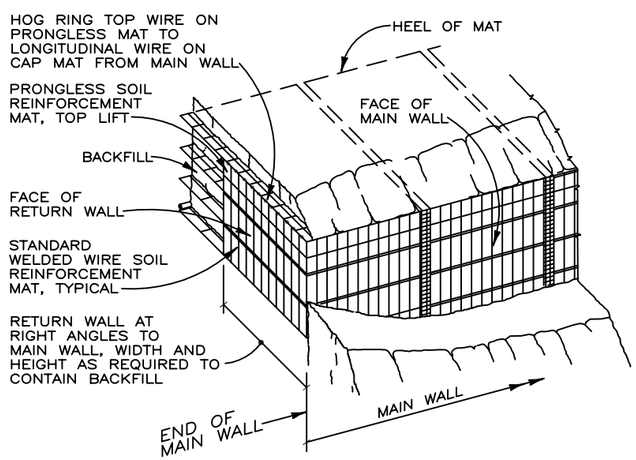

RETURN WALL, PICTORIAL
NOT TO SCALE

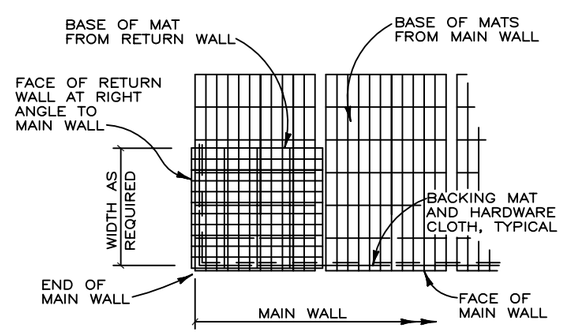

PLAN VIEW

RETURN WALL DETAIL
NOT TO SCALE

NOTES:

1. THESE DETAILS ARE OFFERED FOR INFORMATION ONLY. THEY MAY OR MAY NOT APPLY TO SPECIFIC PROJECTS.
2. THESE DETAILS SHOW HARDWARE CLOTH USED BEHIND THE BACKING MATS. IN SOME APPLICATIONS, FILTER FABRIC WILL BE REQUIRED INSTEAD OF HARDWARE CLOTH. IN THAT CASE, THESE DETAILS SHOULD BE REVISED ACCORDINGLY.

WWCFSTD3M.DWG

THIS DRAWING IS FURNISHED SOLELY FOR THE USE OF OR IN CONNECTION WITH THIS PROJECT, AND THE PROPRIETARY INFORMATION SHOWN HEREON IS NOT TO BE TRANSMITTED TO ANY OTHER ORGANIZATION WITHOUT SPECIFIC AUTHORIZATION BY THE HILFIKER COMPANY. HILFIKER RETAINING WALLS ARE PROTECTED BY ONE OR MORE OF THE FOLLOWING PATENTS: 3,831,682, 4,117,686, 4,260,296, 4,329,089, 4,324,508, 4,343,572, 4,391,557, 4,505,621, 4,616,959, 4,643,618, 4,661,023, 4,856,939, 5,733,072 AND OTHERS PENDING.

REV.NO.	DATE	BY	DESCRIPTION

GRAPHIC SCALE
LINE IS 5 UNITS LONG ON ORIGINAL DRAWING
0 5

PROJ.MGR.
ENGINEER
CADD BY KJ

HILFIKER RETAINING WALLS
3900 Broadway Eureka, CA 95503
P.O. Box 2012 Eureka, CA 95501
707-443-5093 Fax 707-443-2891
Toll-Free 800-762-8962
Web: http://hilfiker.com email: info@hilfiker.com

1902-2002 100 YEARS HILFIKER COMPANY

DWG DATE 23 DEC 02
REVISION DATE
SCALE NOTED

STANDARD DRAWING

WELDED WIRE RETAINING WALL
24" LIFTS

STANDARD DETAILS

PROJECT NO.
SHEET 3 OF 3

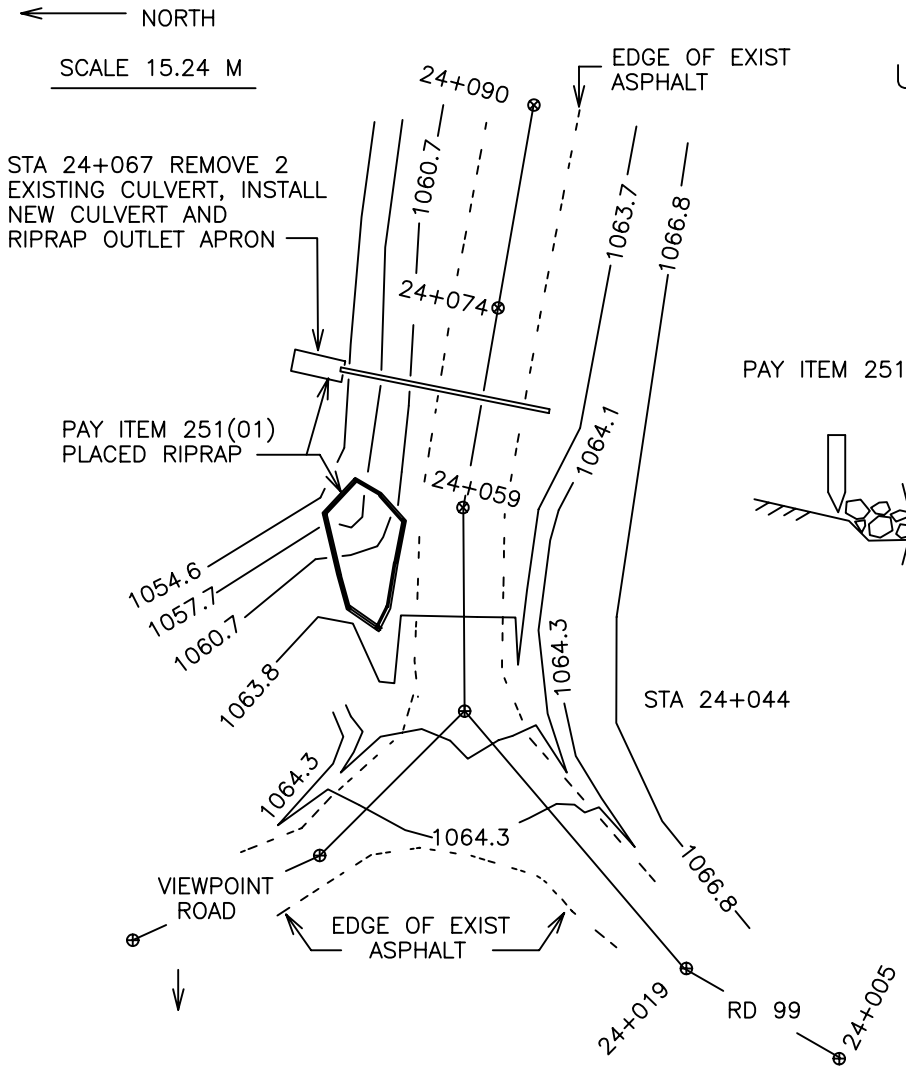

USFS RD 99 MILE POST 14.94
(STA 24+044 METRIC)

STA 24+005 TO STA 24+090 RECONSTRUCT BY SHIFTING CENTERLINE INTO THE EXISTING CUTBANK
INSTALL A NEW CULVERT AT STA 24+067
MACHINE PLACE RIPRAP AS SHOWN TO REDUCE EROSION.

PAY ITEM 251(01) RIPRAP

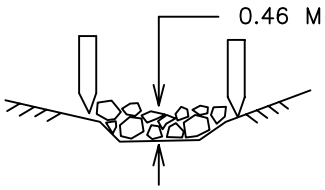

SECTION PLACED RIPRAP
AVE DEPTH 0.46 M
STAKED QUANTITY
COR WILL SAKE LIMITS

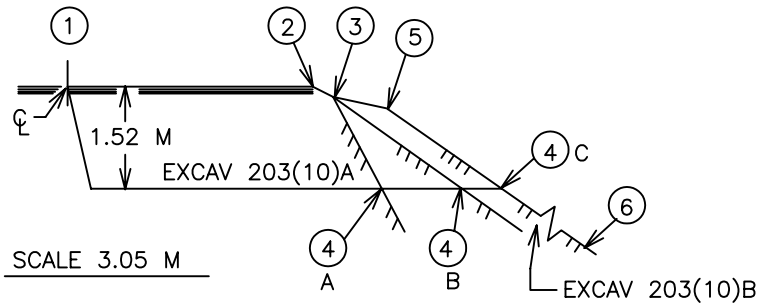

PAY ITEM 170(03) SLOPE STAKING

SET SLOPE STAKES AT STATIONS MARKED BY COR AVERAGE SPACING BETWEEN SLOPE STAKES 15 M.

POINTS 4A, 4B, 4C ARE DAYLIGHT POINTS FOR EXCAVATION 203(10)A AT 1.52 M VERTICAL AT EXISTING CENTERLINE, TOP OF ASPHALT.

POINT 6 IS TOE OF EXCAVATION 203(10), 7.6 M SLOPE DISTANCE FROM EDGE OF EXISTING ASPHALT.

SET SLPE STAKES AT DAYLIGHT POINT (4A, 4B, OR 4C) AND AT POINT 6.

SURVEY NOTE FORMAT

STA _____	1 ℄	2 ASPHALT	3 RD EDGE	4 A,B.C DAYLIGHT PT	5 TOPO	6 7.6 M SLOPE DIST.
VERT	0	Vd	Vd	−1.52	Vd	Vd
HORZ	0	3.66	3.96	Hd	Hd	Hd

K:\fh_eng\mcez\99DEAN\99mp1490metric.dwg

ITEM 170(03) SLOPE STAKING PALN VIEW AT STA 24+044	DEPARTMENT OF AGRICULTURE FOREST SERVICE GIFFORD PINCHOT NATIONAL FOREST	99 ROAD MAINTENANCE SHEET 12 OF 23

MP 14.94 STA 24+074

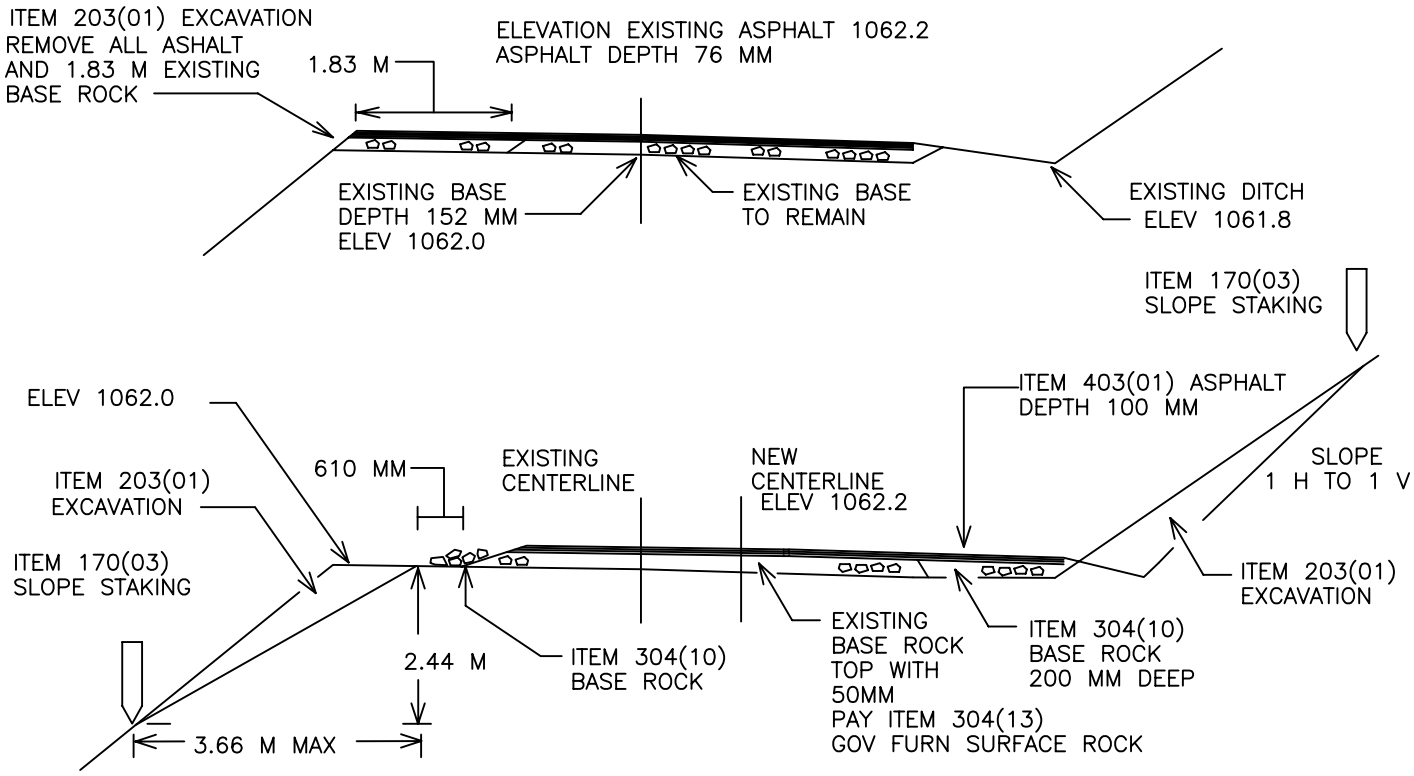

NOTES

1. USFS WILL PAINT MARK NEW CENTERLINE AND PROVIDE STAKE–OUT NOTES FOR PAY ITEM 170(03), SLOPE STAKING. CONTRACTOR SHALL RECORD TOPOGRAPHY SHOTS AT ALL CHANGES IN ROAD / DITCH TEMPLATE AND ALL TOPOGRAPHY BREAKS FOR USE IN DETERMINING QUANTITIES FOR PAY ITEM 203(01)A.

2. RECORD HORIZONTAL AND VERTICAL DISTANCES FROM CUT SLOPE CATCH POINT TO BOTTOM OF NEW DITCH AND TO NEW CENTERLINE AT TOP OF NEW ASPHALT SURFACE. REFERENCE CUT CLOPE CATCH POINT.

3. REMOVE ALL EXISTING ASPHALT AND PORTIONS OF EXISTING BASE ROCK AS MARKED BY USFS COR. PRESERVE AND PROTECT EXISTING BASE ROCK THAT REMAINS. TOP REMAINING BASE ROCK WITH 2 INCHES NEW BASE ROCK PAY ITEM 304(11)B. WATER AND COMPACT ALL NEW BASE ROCK.

4. ALL EXCAVATED MATERIAL IS CLASSIFIED AS UNSUITABLE FOR CONSTRUCTION. HAUL ALL EXCAVATED MATERIAL TO DISPOSAL SITE.

WORK SITE TOTALS

PAY ITEM	PAY UNITS	MTD MEAS	EST QTY	
170(03)	KILOMETERS	AQ	0.124	(10 SECTIONS)
203(01)	CUBIC METERS	SQ	200	
304(10)	CUBIC METERS	DQ	150	
304(13)	CUBIC METERS	DQ	65	
202(03)	METERS	DQ	15	
251(01)	CUBIC METERS	DQ	40	
603(01)	METERS	AQ	13	
603A(03)	EA	AQ	1	(COMMERCIAL ITEM)
403(01)	TONS	AQ	65	

K:\fh_eng\mcez\DEAN99\99sectionmetric.dwg

TYPICAL DETAILS FOR WORK AT STA. 24+044	DEPARTMENT OF AGRICULTURE FOREST SERVICE GIFFORD PINCHOT NATIONAL FOREST	99 ROAD MAINTENANCE SHEET 13 OF 23

SCALE 1525 mm

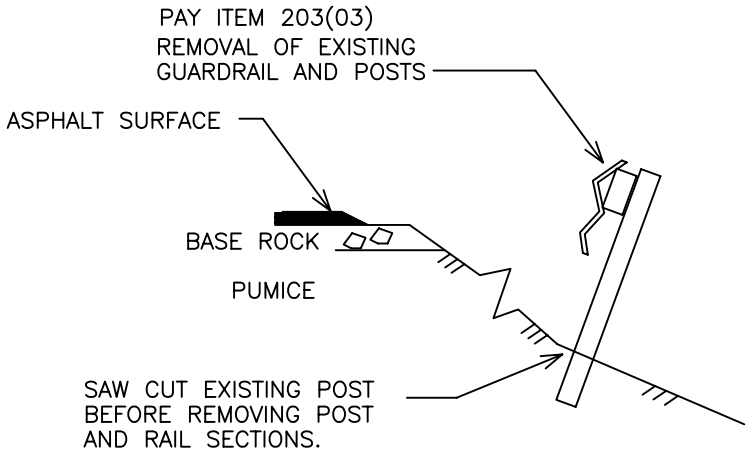

MAX SLOPE DISTANCE FROM EDGE OF EMBANKMENT FAILURE TO GUARDRAIL IS 30 m

HAUL RAIL SECTIONS TO DISPOSAL SITE (BIG CR QUARRY) AND BURY IN ITEM 203(10). HAUL POSTS TO CERTIFIED LAND FILL FOR DISPOSAL. PROVIDE COR WITH RECIEPT FROM LAND FILL OPERATOR.

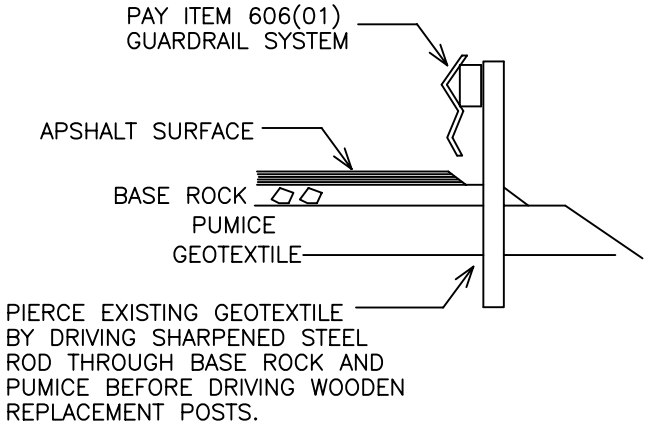

SEE SHEETS 15 – 17 FOR INSTALL DETAILS
PAY ITEM 606(01) GUARDRAIL SYSTEM AND
PAY ITEM 606(02) TERMINAL SECTION

GUARDRAIL REMOVAL PAY ITEM 203(03)	DEPARTMENT OF AGRICULTURE FOREST SERVICE GIFFORD PINCHOT NATIONAL FOREST	99 ROAD MAINTENANCE
		SHEET 14 OF 23

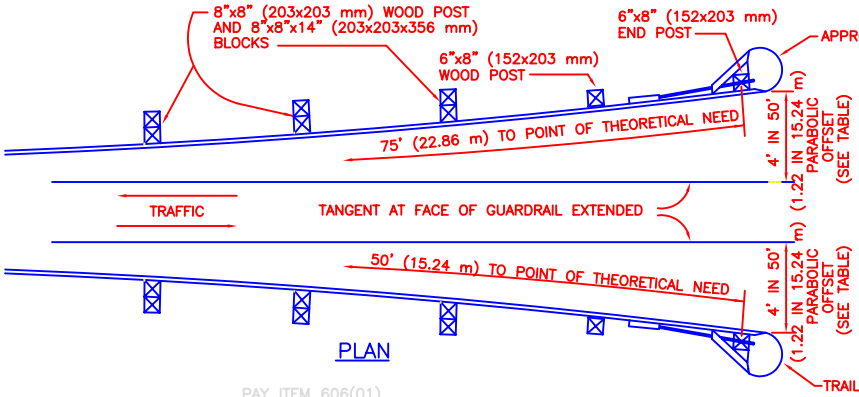

PLAN

TABLE OF OFFSETS
50'-0" (15.24 m) PARABOLA

1st Post	0.06'	(18 mm)
2nd	0.25'	(76 mm)
3rd	0.56'	(171 mm)
4th	1.00'	(305 mm)
5th	1.56'	(475 mm)
6th	2.25'	(686 mm)
7th	3.06'	(933 mm)
8th	4.00'	(1219 mm)

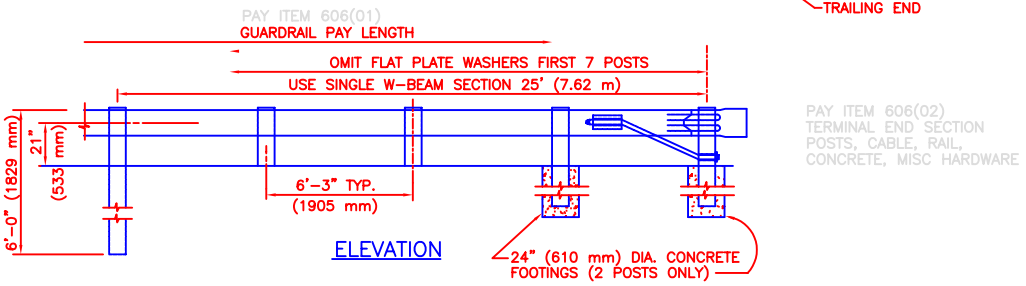

ELEVATION

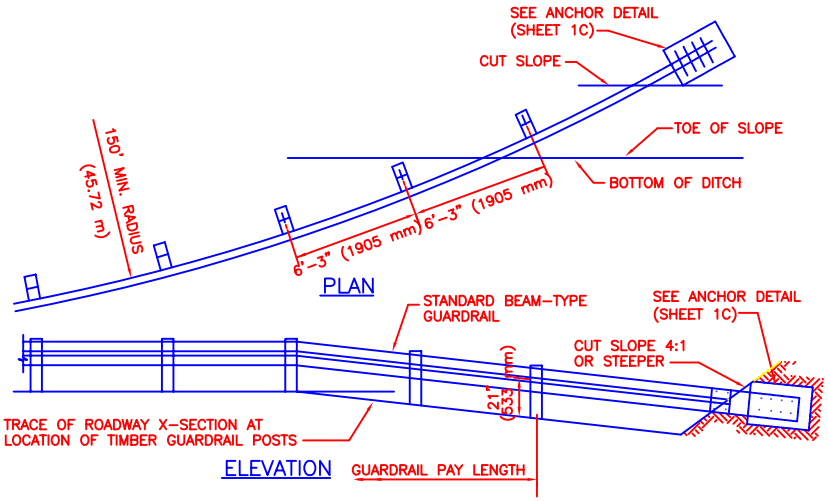

PLAN

ELEVATION

NOTES:

1. A FILL ANCHOR SHALL CONSIST OF A TERMINAL SECTION ANCHOR PLATE CABLE ASSEMBLY, AND MISCELLANEOUS HARDWARE NECESSARY FOR A COMPLETE INSTALLATION.
2. A CUT ANCHOR SHALL CONSIST OF THE CONCRETE BLOCK, THE 4' (1219 mm) SECTION OF W-BEAM GUARDRAIL, AND THE REBAR NECESSARY FOR A COMPLETE INSTALLATION.
3. A BRIDGE ANCHOR SHALL CONSIST OF THE ADDITIONAL LARGER POSTS, TERMINAL SECTION, AND MISCELLANEOUS HARDWARE NECESSARY FOR COMPLETE INSTALLATION.
4. CONCRETE FOR THE ANCHOR SHALL CONFORM TO SECTION 602 OF FP-79.
5. CABLE AND CONNECTING HARDWARE SHALL CONFORM TO THE REQUIREMENTS OF AASHTO M30 EXCEPT THAT THE CABLE SHALL BE 3/4 INCH (19 mm) 6 x 19 INDEPENDENT-WIRE-ROPE CORE (1 WRC), CLASS A, GALVANIZED, RIGHT-REGULAR LAY MANUFACTURED OF IMPROVED PLOW STEEL WITH A MINIMUM BREAKING STRENGTH OF 42,800 POUNDS (19,414 kg), UNLESS SPECIFIED OTHERWISE.
6. THE ANCHOR PLATE, ANCHOR ASSEMBLY, AND OTHER MISCELLANEOUS HARDWARE SHALL BE FABRICATED FROM STEEL CONFORMING TO ASTM A 36.
7. BOLTS, NUTS, WASHERS, TERMINAL SECTIONS, AND RAIL ELEMENTS SHALL CONFORM TO AASHTO M 180.
8. TERMINAL SECTIONS SHALL BE OF THE SAME CLASS AND TYPE OF MATERIAL AS THE BEAM TO WHICH IT ATTACHES.
9. THE METRIC CONVERSIONS ARE PROVIDED IN PARENTHESIS FOLLOWING THE ENGLISH UNITS.

TYPICAL GUARD RAIL
SHEET 1 OF 3

GUARDRAIL DETAIL	DEPARTMENT OF AGRICULTURE FOREST SERVICE GIFFORD PINCHOT NATIONAL FOREST	99 ROAD MAINTENANCE SHEET 15 OF 23

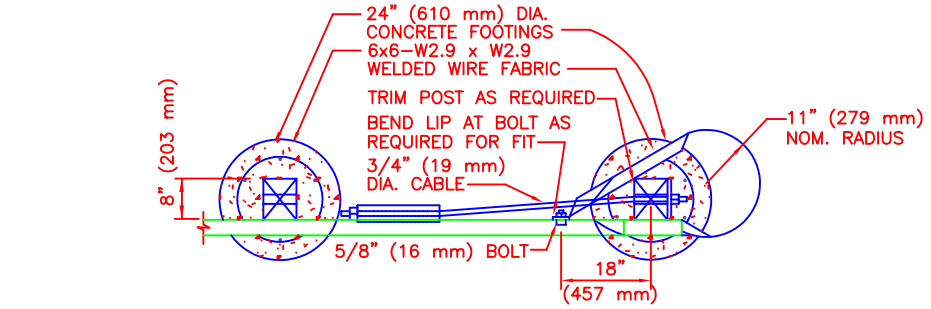

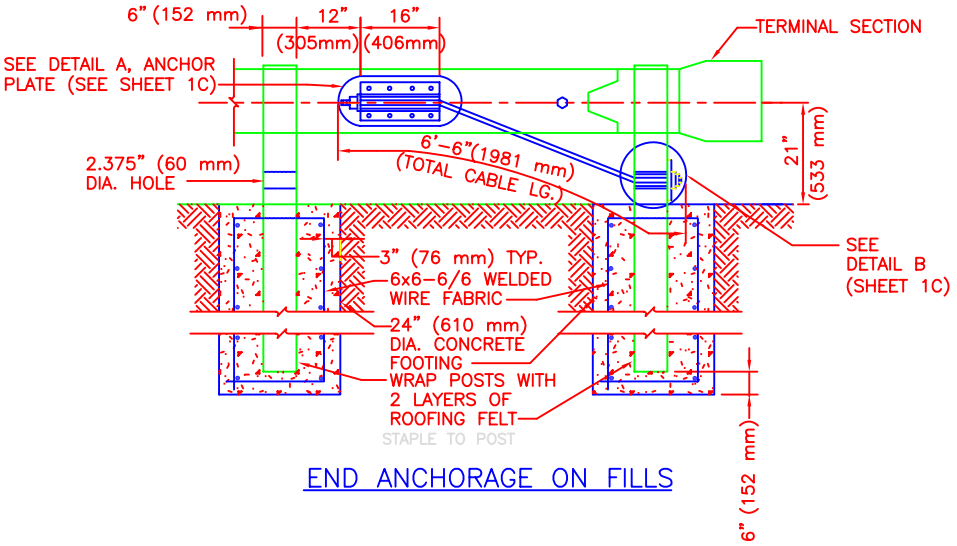

END ANCHORAGE ON FILLS

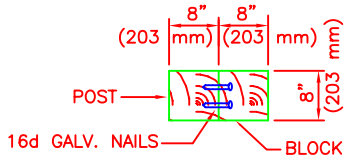

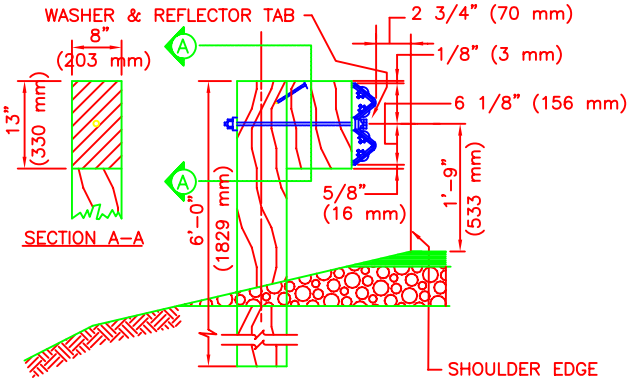

NORMAL POST INSTALLATION

SHEET 2 OF 3

NOTE:

1. THE METRIC CONVERSIONS ARE PROVIDED IN PARENTHESIS FOLLOWING THE ENGLISH UNITS.

PAY ITEM 606(02) TERMINAL END SECTION	DEPARTMENT OF AGRICULTURE FOREST SERVICE GIFFORD PINCHOT NATIONAL FOREST	99 ROAD MAINTENANCE SHEET 16 OF 23

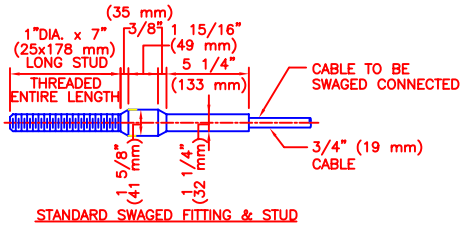

CABLE DETAIL

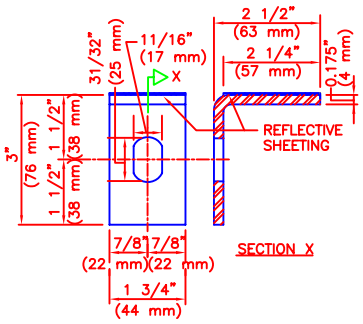

WASHER WITH REFLECTOR TAB

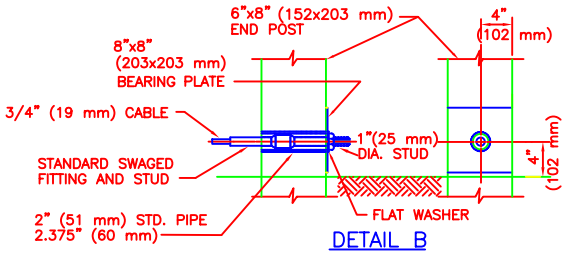

DETAIL B

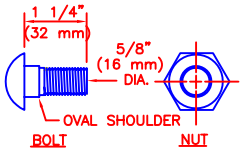

SPLICE BOLT AND NUT

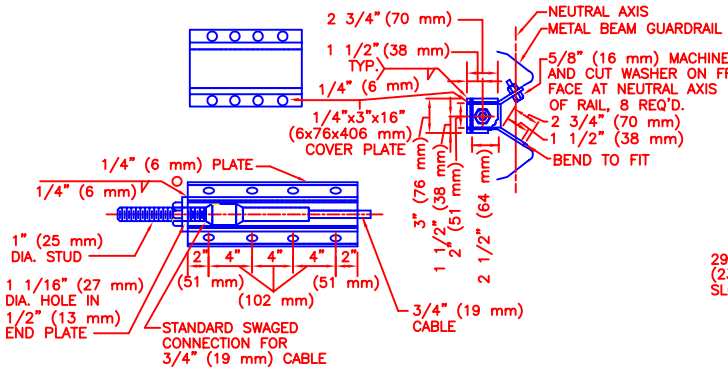

DETAIL A–ANCHOR PLATE

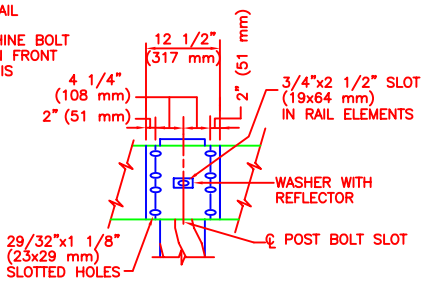

RAIL SPLICE

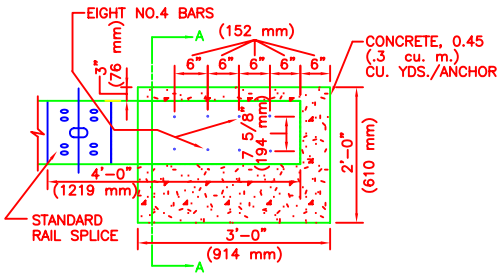

CUT ANCHOR DETAIL

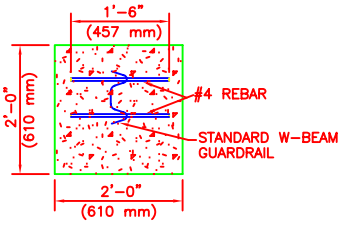

SECTION A–A

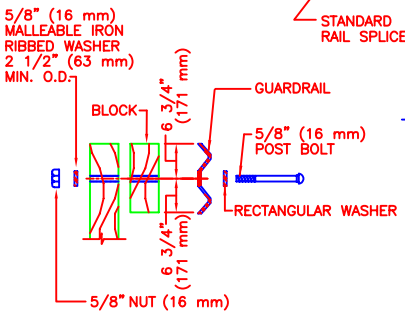

POST BOLT HARDWARE

DRAWING 1C
SHEET 3 OF 3

NOTE:

1. THE METRIC CONVERSIONS ARE PROVIDED IN PARENTHESIS FOLLOWING THE ENGLISH UNITS.

GUARD RAIL AND TERMINAL SECTION HARDWARE	DEPARTMENT OF AGRICULTURE FOREST SERVICE GIFFORD PINCHOT NATIONAL FOREST	99 ROAD MAINTENANCE SHEET 17 OF 23

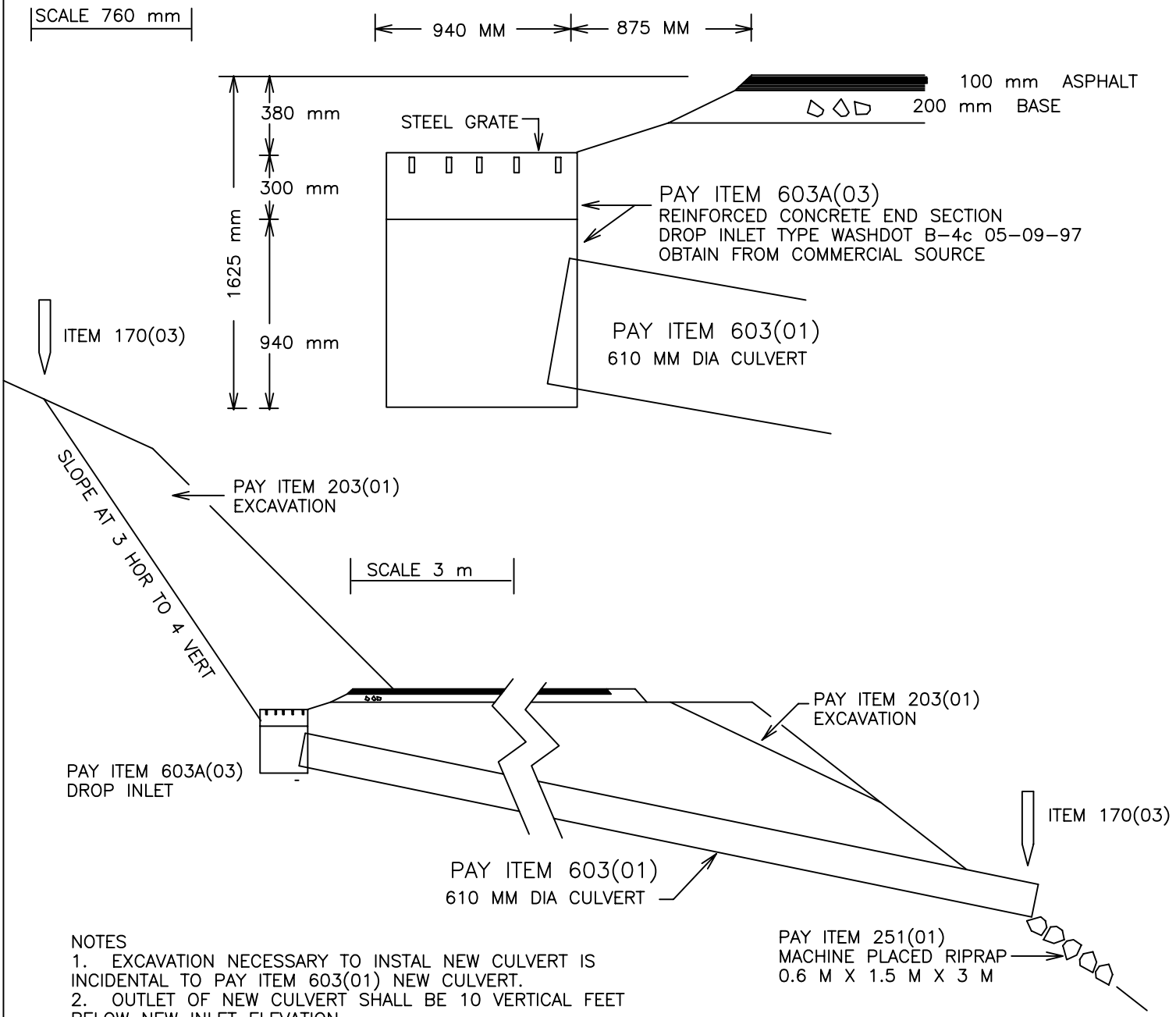

NOTES
1. EXCAVATION NECESSARY TO INSTAL NEW CULVERT IS INCIDENTAL TO PAY ITEM 603(01) NEW CULVERT.
2. OUTLET OF NEW CULVERT SHALL BE 10 VERTICAL FEET BELOW NEW INLET ELEVATION.
3. CONSTRUCTION STAKE NEW CULVERT, PROVIDE DATA TO COR FOR APPROVAL. DO NOT ORDER NEW CUYLVERT UNTIL COR DETERMINES LENGTH OF NEW CULVERT.

K:\fh_eng\mcez\99DEAN\99dropinlet.dwg

INSTALL NEW CULVERT DROP BOX INLET RIPRAP SLOPE STAKING	DEPARTMENT OF AGRICULTURE FOREST SERVICE GIFFORD PINCHOT NATIONAL FOREST	99 ROAD MAINTENANCE SHEET 18 OF 23