Appendix A—Vehicle Entrapments Study Plan

MTDC Project #6287 Vehicle Entrapments

Conduct of Study Plan

PURPOSE

To evaluate factors (heat load, off-gassing) affecting wildland firefighters entrapped in a vehicle, compared to being in a fire shelter adjacent to the vehicle.

METHOD

Subject several instrumented test vehicles and fire shelters to direct flame contact in several different fuel types:

1. Southeastern U.S. Palmetto (NFFL 7)
2. Southeastern U.S. Sawgrass (NFFL 3)
3. California Chapparral (NFFL 4)
4. Grass-Brush (NFFL 2).

Fire shelters, both the current model (FS Spec. 5100-320) and various prototypes, will be set up in the immediate proximity of the vehicles to measure fire and heat effects both inside and outside the shelters.

Firefighter PPE will also be placed around filled 5-gallon water bags and laid in the same area as the shelters to assess visual indicators of heat load and fire effects.

REQUIRED MEASUREMENTS/ OBSERVATIONS

Both formal measurements and visual observations will be taken as part of the documentation of this study. These include:

1. Preburn fuel loading
2. Postburn fuel loading
3. Temperature thermocouples
   - Each 6 inches at 0 to 5 feet
   - Each 12 inches at 5 to 10 feet
4. Off-gassing inside vehicle with FASS packages (IFSL)
5. Heat flux radiometers.

PHOTOGRAPHIC DOCUMENTATION

Desired Photo coverage and support for this study includes:

1. 35-mm color slides of the setup and conduct of the burns, with postfire results of vehicles, fire shelters and other PPE
2. “Beta” video taping, same as above in number 1
3. On-tape interviews of participants during various stages of the burns, with emphasis on the interagency compo-sition of the participants
4. Aerial videos of burnover from helicopter.

WRITTEN DOCUMENTATION OUTPUTS

Written documentation of the burn results, and potential outputs from these burns include:

1. Levels of heat flux by duration
2. Data logger readings from within vehicle cabs
3. Technical report on the burns and results
4. Information articles for technical journals
5. Presentations and/or poster sessions for fire symposiums
6. Potential policy letter from WO-FAM on vehicle entrapments
7. Video production (6 to 10 minutes) on study and results for field.

EQUIPMENT

The following equipment items will be needed onsite for the conduct of the burns:

1. Vehicles (one engine and one pickup type per burn); provided by local cooperators
2. Fire shelters (current model and prototypes)
3. Data-loggers/gas monitors
4. Fire clothing (shirts, trousers, flight suits, coveralls)
5. Web gear, shelter cases, gloves, hardhats (for burning)

6. Flame lengths and duration

7. Visual indicators of damage to all vehicles and equipment.

LOCATION/TIMING

In order to obtain quantifiable data from a variety of fuel types and geographic locations, the following study site be used:

1. Northcentral Florida, in the vicinity of Lake City; the Florida Division of Forestry has agreed to provide excess vehicles at that location to subject to the test fires, as well as personnel to assist the MTDC crew.

2. Los Angeles County, California. Both LA County Fire and the California Department of Forestry have expressed an interest in participating in this study, and in providing surplus vehicles to be burned. Specific agreement needs to be reached with them. In addition, the California State Fire Marshal had expressed an earlier interest in this study, and will be contacted to see if his office will participate.

Proposed timing for the study burns:

Florida: February 23 to March 1, 1996

California: mid-April to mid-May, 1996.

PERSONNEL

The following positions will be needed to complete and document the conduct of these burns:

1. Project Leader (Mangan)
2. Fire Shelter Specialist (Putnam)
3. Instrumentation (Gasvoda/DeLand)
4. Photographer (Kautz)
5. Forestry Techs (Lee/Petrilli/Weger)
6. Cooperator Representative
7. Fire Behavior Analyst (local)
8. Engine crew (local)
9. Fire Instrumentation Specialist (Butler)

JOB HAZARD ANALYSIS—Attached

CONTACTS

MTDC—
Dick Mangan
Phone: (406) 329-3849

Florida Division of Forestry—
J.P. Greene
Phone: (904) 488-1728

Jim Karels
Phone: (906) 488-6111

Los Angeles County—
John Harris
Phone: (818) 790-6434

California Department of Forestry—
Dan Francis
Phone: (916) 322-7912

California State Fire Marshal—
Hugh Council
Phone: (916) 262-1908

Appendix B—Characterizing Gases Generated in Vehicles and Fire Shelters

Introduction

As temperatures increase inside a vehicle cab or fire shelter, synthetic components may thermally degrade into other products by various chemical processes (mainly combustion and pyrolysis). These components include rubber, glass, different types of plastics (polyethylene, polyvinylchloride, acrylonitrile-butadiene-styrene, etc.), and other chemical compounds found in the vehicle's seats, side panels, dashboard, carpeting, floormats, tires, electrical wiring, batteries, circuit boards, and other components hidden behind the dashboard and under the hood. This "off-gassing" can release chemical products that may be toxic or dangerous at some levels. Concern has also been expressed about the chemical nature of the adhesives used in the fire shelter. Because of these concerns, the chemical quality of the air inside a vehicle cab and inside a fire shelter was studied during experiments in which prescribed fires burned over vehicles and fire shelters.

The First Field Test

For field tests scheduled in February 1996, special equipment was needed that could not only monitor the smoke and gas produced in the experiment but survive high temperatures and flame. Although many instruments are commercially available to measure chemical emissions, none is designed to measure emissions while a fire passes over them. The Fire Chemistry Research group of the Forest Service's Intermountain Fire Sciences Laboratory in Missoula, MT, has developed instrumentation that can collect samples while withstanding the hazardous environment of a fire. This instrumentation can collect particulate matter and gas samples, and monitor carbon monoxide and carbon dioxide in real time. Three of these Fire Atmosphere Sampling System (FASS) field packages were loaned to MTDC. In addition, "passive" Drager tubes were used to detect sulfur dioxide, hydrogen cyanide, and hydrochloric acid. These tubes monitored gases that were not monitored by the FASS package. Drager tubes are small, calibrated glass tubes packed with specific chemicals that change color in the presence of the chemical that the tube is designed to detect. The chemical's concentration can be calculated after comparing the amount of color change with calibration marks on the side of the tube. Passive tubes—unlike the more popular active tubes—have no mechanically drawn air flowing through them and operate on the principle of equilibrium diffusion with the surrounding air.

On February 26, 1996, this equipment was deployed on a cured bunchgrass/matted grass-thatch site at Lake City, FL, a day before the prescribed burn planned for the vehicle entrapment study. A FASS package was set up to monitor the air in each of the two vehicle cabs. The third FASS monitored the air inside a standard aluminum fire shelter.

The FASS had to be modified to fit in the vehicles and the shelter. The particulate-collecting "heads" were positioned where a human would be breathing inside the cab or shelter. After particulate is collected on filters in the head, pumps that deliver a flow of 2 liters per minute draw gases through inert Teflon tubing to collection canisters and real-time sensors. The real-time data are recorded on data loggers. The tubing is protected by a loose, flexible ceramic sheathing. The tubing umbilical exposed in the cab was threaded through an aluminum pipe to support the head and umbilical and to provide protection from the high temperatures. The aluminum pipe extended from the cab interior, through the cab floor, to the ground. The 50-foot umbilical (with Teflon tubes inside) was stretched from the lee side of the shelter or vehicles to the main body of the FASS package that holds the sensors, pumps, data loggers, and canisters. The lee side refers to the side of the shelters and vehicles opposite the fire's expected approach. The umbilical and FASS were buried after they had been assembled, calibrated, and armed. The aluminum pipe inside the shelter was slanted from the FASS head to the ground, roughly simulating the position of a human body lying in a shelter. After the arm plug has been pulled, these FASS packages activate once they sense a predetermined level of carbon monoxide. Carbon monoxide is a product of incomplete combustion that will always be produced in a fire. It is one of the first gases produced and its concentration spikes sharply early in any fire episode. The passive Drager tubes were hung inside the cabs and shelter where they were protected with high-temperature foil and tape. The tubes, like the FASS heads, were positioned in the approximate area where a human would be breathing.

A short-duration, low-intensity burn took place the next day. The results were disappointing. One package failed to trigger, while data from the other packages were negligible. The Drager tubes showed no color change. A second burn attempted a few days later in a Palmetto site was cool and spotty because of precipitation. Results were negligible and the Drager tubes indicated no color change.

This burn yielded two major conclusions. Future burns needed to be of high intensity and long duration. In addition, we learned that we needed to develop new compact, portable instrumentation to detect and measure acidic gases that could be generated.

New Equipment

New, simple equipment was developed to detect and measure the acid gases—hydrogen chloride, hydrogen cyanide, and sulfur dioxide (see table at right). Additional chemicals of interest were carbon monoxide, benzene, and toluene. Drager tubes would serve as the "sensors" in the instrumentation. Color changes in the tubes can be examined easily after a test.

Chemical	Predicted Color Change	Reaction Chemistry
Sulfur dioxide	Violet to yellow	SO_2 + pH indicator → yellow reaction product
Benzene	White to brown-green	$C_6H_6 + I_2O_5 + H_2SO_4 \rightarrow I_2 + CO_2$ + oxidation products
Hydrogen chloride	Blue to yellow	HCl + Bromophenol Blue → yellow reaction products
Toluene	White to brown	$C_6H_5CH_3 + I_2O_5 + H_2SO_4 \rightarrow I_2 + CO_2$ + oxidation products
Carbon monoxide	White to brown	$5CO + I_2O_5 + SeO_2 / H_2SO_4 \rightarrow I_2 + CO_2$ + oxidation products
Hydrogen cyanide	Yellow to red	$HCN + HgCl_2 \rightarrow HCl + Hg(CN)_2$
		HCl + Methyl Red → reddish reaction product

The new package used sorbent tubes in addition to the Drager tubes. These tubes generally are more accurate than the Drager tubes, but they show no color change and require laboratory analysis. Either real-time monitoring or a visual indicator like a Drager tube is needed to be sure that an experiment has produced the chemicals being studied. When both tubes are used, the Drager tubes can provide a coarse measurement while the sorbent tubes provide a fine measurement. Four types of sorbent tubes were used to measure sulfur dioxide, hydrochloric acid, hydrogen cyanide, and the b-tex compounds that include benzene, ethylbenzene, toluene, and xylene.

Both the Drager and sorbent tubes in this package require a constant gas flow to be delivered through the tubes, unlike the passive Drager tubes used in the first test. A system of pumps, flow controllers, tubing, and a valved manifold system supplied the air flow. Three pumps were required for each gas sampling package (Figure 1). A 12-volt pump pulls a steady gas stream of 2 liters per minute into the system through ¼-inch ID Tygon tubing. This pump was powered by a 12-volt Power Sonic rechargeable gel battery that had a lifetime of 8 hours under continuous usage. Excess gas flow is channeled to an exhaust port. From this main gas flow, two smaller pumps pull the required air flows through ⅛-inch Tygon tubing to either the sorbent tube sampling train or the Drager tube sampling train. The tubes in each sampling train were arranged in parallel. Each tube has specific flow requirements that are controlled by a valved manifold. The flow across each tube is set by its associated needle valve on the manifold. The pumps pulling flow across each sampling train also can be programmed to adjust flow

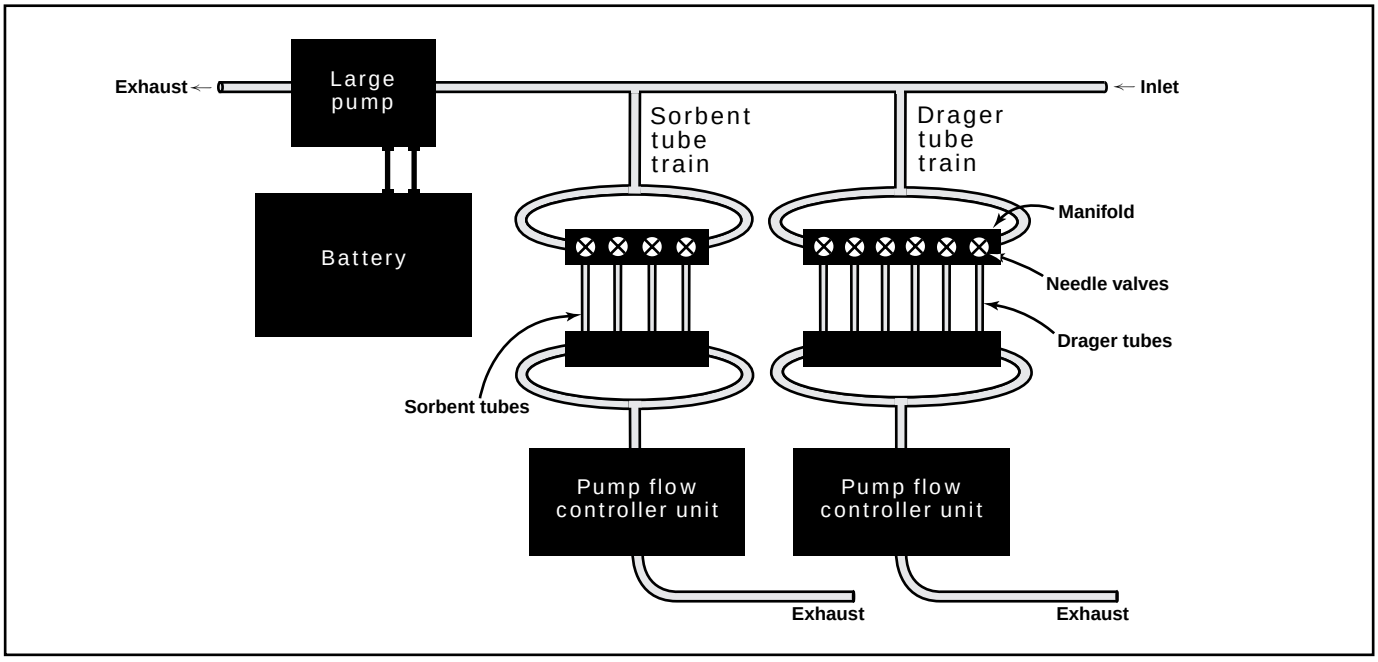

Figure 1—Schematic of the new gas sampling system used during the entrapment tests in California.

control. This guarantees delivery of a constant preset flow rate if the inline Teflon filter collects a great quantity of particulate or if there is a minor blockage (such as pinched tubing) in the system. Once gas has passed through the sampling trains, the gas is channeled to the exhaust ports.

Outer packaging and a long-distance flow delivery system (umbilical) were needed to help the instrumentation survive the hazardous fire environment. The components of the system were mounted on an aluminum sheet that slid inside an old steel military surplus ammunition box. The system was oriented such that the box sits on its side in the field or when working with the interior components. A Swagelok bulkhead fitting provided the connection for interior and exterior tubing. The exterior PTFE Teflon tubing was 24 feet long. A soft ceramic sheath protected it from high temperatures. The sheathing must withstand temperatures as high as 1400 °C where it is exposed in the vehicle cab and shelter. The umbilical was supported by an aluminum pipe that extended from the cab, through the floor to the ground. A piece of aluminum over the end of the pipe protected the umbilical and interior tubing while allowing gases to freely enter the tubing.

Field Tests With the New Equipment

The next field tests were during a prescribed burn in June 1996 near Valencia, CA. Two test vehicles were used. The smaller was a Ford "Patrol" Type 5 engine. It had a four-speed manual transmission with a 1-ton chassis manufactured between 1972 and 1976. The cab interior had a large amount of vinyl and plastic. The other engine was a Crown Fire Coach, Type 1 engine manufactured in 1968. It had less plastic and synthetic material in the cab. A dividing window enclosed the front of the cab. All holes and leaks due to age were patched and plugged to simulate a new or operational vehicle that had received regular maintenance.

The vehicles, shelters, and test instrumentation were deployed on June 5, 1996, for a prescribed burn scheduled that day. The vehicles and shelters were situated on the outer edge of a road near the top of a ridge. The hillside below the road had a 70% slope. The vegetation was primarily chamise and sage, fuels known for their volatile oil components. Some cut vegetation was piled in open or sparse areas near the road to provide a continuous fuel source and help create an intense, long-duration fire.

The gas detection system was deployed in a standard aluminum fire shelter and in the Ford Patrol. The umbilical was supported by aluminum pipes inside the vehicle cab (Figures 2 and 3). The remainder of the umbilical stretched across the road to the gas sampling package, which was on the cut bank side of the road. The instrumentation was on the lee side of the vehicle and shelters with respect to the direction of the fire's expected approach. Before the fire, gas flow across each tube and across the whole train was calibrated. A BIOS dry calibration, piston-type flow meter was used for the calibrations. As close to ignition time as possible, the flow controller was programmed, the pumps were started, and the umbilical and gas box were buried.

The fire was ignited below the road at the bottom edge of the burn unit and swept up the slope to the vehicles and shelters. The fire was more severe and of longer duration than either Florida burn. Instrumentation survived the experiment with no damage. The shelters and vehicles also appeared to have sustained little if any damage. The gas sampling units were retrieved, the pumps were stopped, and the Drager tubes were examined. All the tubes except the hydrogen cyanide tube showed some color change. All experimental tubes were removed and capped. A

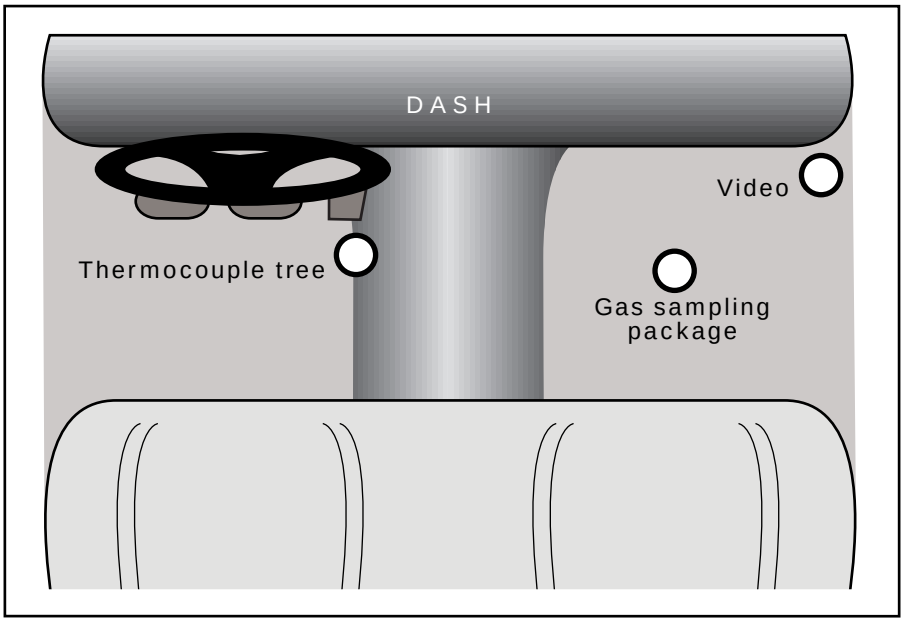

Figure 2—Overhead view of the instrumentation positions in the cab of the vehicle. The aluminum conduit with wiring or tubing inside was fitted through these holes and served as support and protection.

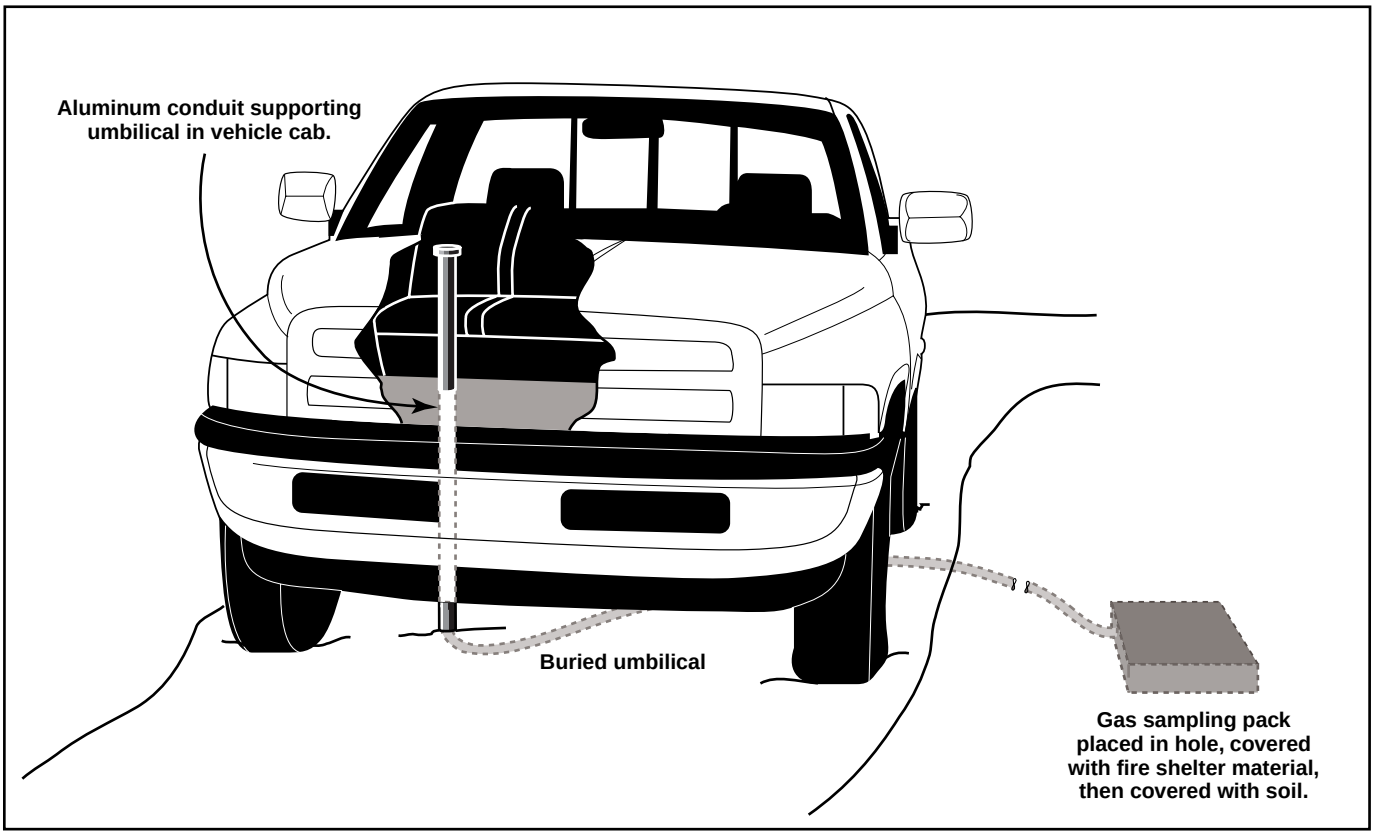

Figure 3—Cutaway view of the gas sampling assembly inside the aluminum conduit in the cab of the vehicle, and underground.

postfire calibration test was run with another set of Drager and sorbent tubes. The Drager tubes were examined and the following results were obtained:

GASES (parts per million)	Engine	Shelter
SO_2	18.7	4.4
HCN	0.0	0.0
Benzene	1.5	0.8
HCl	7.8	1.0
Toluene	13.6	6.3
CO	29.3	5.5

These numbers are derived from calculations applied to concentrations taken from visual examination of the calibrated Drager tubes. New Drager and sorbent tubes must be used for each fire as the reagents are chemically changed, rendering further readings inaccurate or unreliable.

A second prescribed burn took place the following day. The same vehicles were used. No structural damage and very little cosmetic damage (a few paint blisters) had occurred to the vehicles during the first fire. The second site had a higher fuel loading that promised an even more intense and longer fire event. The shelters and vehicles were positioned next to the edge of a road crossing the burn unit as in the first experiment. This road was on the east side of the draw. Some vegetation was cut and piled in bare and sparsely vegetated spots below the vehicles and shelters to obtain a continuous fuel source.

The gas sampling instrumentation was deployed inside the Ford Patrol and standard aluminum fire shelter exactly as it had been the day before. After calibration and as close to the time of ignition as possible, new Drager and sorbent tubes were fitted into the equipment, the pumps were started, and the equipment was buried.

After the fire was ignited, a wind change prevented flames from engulfing the shelters and vehicles. Thermocouple data revealed that the temperatures during the June 6 burn were somewhat higher than during the burn the day before. Those temperatures also lasted longer, an important condition for thermal degradation of materials in the vehicles and shelters. After the fire, smoke continued to rise from the interior of the patrol. When the door was opened, thick, dense, black, sooty smoke billowed out of the cab. This smoke was very black and sooty compared to the brown smoke that had collected in the cab during the first fire. The inside panel of the driver's door was smoking. The synthetic materials on the door panel

on the fire side of the cab appeared to be thermally decomposing. Other synthetic materials hidden under the hood may have been in a similar condition.

The Drager and sorbent tubes were collected and capped. A postcalibration test was performed on the equipment. All the Drager tubes except the hydrogen cyanide tube showed a color change. Results from the fire were:

GASES (parts per million)	Engine	Shelter
SO_2	19.8	6.6
HCN	0.0	0.0
Benzene	39.2	11.3
HCl	21.2	9.0
Toluene	26.6	8.7
CO	102.1	50.0

Because no color change was recorded in the hydrogen cyanide tubes for either field experiment, concentrations were zero or undetectable as measured by the Drager tubes. In both experiments, all chemicals other than hydrogen cyanide were detected in both the shelter and the vehicle. Concentrations were higher in the vehicle cab. The concentration of sulfur dioxide was slightly higher during the second burn. The concentrations of benzene, toluene, hydrochloric acid, and carbon monoxide all were significantly greater during the second burn, particularly inside the vehicle. Data from the sorbent tubes for both burns were negligible and unreliable because of pump failures.

The final field test was on July 24, 1996, in the Beaverhead National Forest near Dillon, MT. Two surplus vehicles, a 1955 2½-ton, 6x6 Reo and a 1972 ¾-ton 4x4 (club cab) Dodge pickup, were positioned on an old logging road next to a windrow of lodgepole pine slash. Fire shelters were placed near the vehicles. The dry, densely piled slash and midsummer weather conditions would normally produce an intense fire with a long duration.

One gas sampling system was positioned inside the newer Dodge pickup while the other was placed inside the standard aluminum fire shelter. Some modifications were made to the gas sampling system. Teflon tubing in the umbilical was replaced to ensure the system's purity. Internal plumbing was changed so that one pump flow controller unit was pulling across both the Drager tube and sorbent tube trains. A temperature label was slipped inside the Tygon tubing to monitor gas temperature at the entrance of the gas sampling package. Check valves were added at strategic points to prevent backflows that could contaminate the system or sample tubes. New Drager and sorbent tubes were placed in the collection unit after a calibration test.

The windrow of fuel was ignited. The wind changed direction and flames did not engulf the sides of the vehicles and shelters as expected. Sooty, dark smoke did collect in the vehicle cabs.

After the fire, the boxes were retrieved, the tubes were removed and capped, the postfire flow calibrations were performed, and the Drager tubes were examined. The sorbent tubes were sent to the Clayton Environmental Laboratory for analysis. Each yielded the results shown in the two tables below.

Prefire and postfire calibration data indicated that the sorbent tubes still had flow problems. With such a problem, concentrations could be off by a factor of 10. Although concentrations may have been off, all test chemicals were detected by the sorbent tubes. The concentrations of benzene and toluene were the highest among the gases studied, whether they were measured by sorbent or Drager tubes. Gas concentrations were higher in the vehicle than in the shelter except for hydrogen chloride, where the difference was minimal and the concentrations were low.

This test had mixed results. Benzene and toluene appear in concentrations that are nearly as high if not greatly higher than concentrations produced in the California burns. Concentrations of sulfur dioxide, hydrochloric acid, and carbon monoxide were lower than those detected in the California field tests. Temperature data obtained from the thermocouples show that this fire had the longest duration. The temperatures peaked slightly below those of the second California burn but were sustained at higher temperatures for a longer time.

The concentrations derived from the field tests may underestimate the true chemical concentrations. Correction factors were made for the excess amounts of flow before ignition. It is impossible to visually judge when gases are no longer being produced at the end of the experiment. Air volume is measured to the time the system is stopped, whether that air contains gases or not. That may flush and dilute gases in the sample tube.

DRAGER TUBES GASES (parts per million)	Engine	Shelter
SO_2	3.1	2.9
HCN	0.0	0.0
Benzene	53.0	0.0
HCl	7.7	4.8
Toluene	403.5	0.0
CO	18.7	0.1

SORBENT TUBES GASES (parts per million)	Engine	Shelter
Xylene	3.8	< 0.10
HCN	1.2	< 0.09
Benzene	5.1	< 0.08
HCl	0.4	< 0.60
Toluene	8.10	0.30
Ethyl Benzene	0.96	< 0.06

Discussion

From 1960 to 1975, the average amount of plastics in vehicles increased from 25.9 to 129.5 pounds. This trend has continued. Today the average vehicle contains over 200 pounds of plastic. Barbara Levin has compiled a literature review (Levin 1987), *The Chemical Nature and Toxicity of the Pyrolysis and Combustion Products of Seven Plastics*. Seven plastics were documented to produce over 400 chemicals. All seven plastics (Table 1) could generate carbon monoxide, and six of the seven could generate benzene and toluene. The table shows some of the data from her literature review.

Many plastics, including those commonly found inside motor vehicles, can produce the chemicals detected in these field tests. The flash ignition and decomposition temperatures (Table 2) for some of these plastics are in the range of temperatures reached inside or near the cabs of the vehicles (Table 3) during the tests. Long polymer chains decompose in the presence of heat or flame, producing chemicals of lower molecular weights such as hydrogen chloride, hydrogen cyanide, and similar chemicals.

Smoke, ranging in color from dark brown to dense sooty black, accumulated in the cabs of all the test vehicles during each of the field tests. Even after the June 6 burn was over, the Patrol continued to generate this smoke. This provides some evidence that the smoke was generated from some of the vehicle's synthetic components. In the early stages of decomposition, styrene polymers and acrylonitrile-butadiene-styrene (ABS) characteristically generate black, sooty smoke rich in aromatic polymers.

Table 1—Gases produced by seven plastics.

GASES PRODUCED BY SEVEN PLASTICS	Benzene	HCl	HCN	Toluene	CO
Rigid polyurethane foam	✓	✓	✓	✓	✓
Polyester	✓			✓	✓
Polyvinyl chloride	✓	✓	✓	✓	✓
Polystyrene	✓			✓	✓
Nylon	✓		✓	✓	✓
Polyethylene	✓	✓		✓	✓
Acrylonitrile-butadiene-styrene			✓		✓

Table 2—Flash ignition and decomposition temperatures for six plastics.

FLASH IGNITION AND DECOMPOSITION TEMPERATURES	Flash ignition temperature (˚C)	Decomposition temperature (˚C)
Polyethylene	341-357	340-440
Polyvinyl chloride	391	200-300
Polystyrene	345-360	300-400
Acrylonitrile-butadiene-styrene	466 (self ignition)	300-400
Nylon	421	300-350
Rigid polyurethane foam	310	

Table 3—Temperatures reached in the outside air, inside a vehicle cab, and inside and outside a fire shelter during three tests.

TEMPERATURE COMPARISONS INSIDE AND OUTSIDE	Location	June 5 (˚C)	June 6 (˚C)	July 24 (˚C)
Vehicle:	Outside	1000	440	< 200
	Cab ceiling	< 85	280	250
	Cab floor	—	45	—
Shelter:	Outside surface	430	300	150
	Inside surface	150	180	140
	Inside 2 inches AGL	150	< 80	40
	Inside 12 inches AGL	220	—	75

Carbon monoxide can be produced as a byproduct of the thermal decomposition of many plastics. It is also a product of incomplete combustion and is produced in any wildfire. A portion of the carbon monoxide detected may have come from smoke produced by natural fuels. Sulfur dioxide may be produced by thermal degradation of tires. Some tires were undamaged during the first California burn but caught fire during the second. During the Montana burn, tires burned on the side facing the fire and smoked on the other side. Concentrations of sulfur dioxide were highest during both the California burns, even though the tires generally did not burn or smoke. Industrial processes in the state may have contributed to the concentration of sulfur dioxide. Baseline data before the experiment could have helped determine the ambient concentration of sulfur dioxide on the day of the burn.

The fire shelter contains no plastics to serve as a source for these chemicals. However, all chemicals except hydrogen cyanide were detected in the fire shelter. Hydrogen cyanide is a component of the adhesives used in the shelter. This chemical was not detected by the Drager tubes and was only detected in small quantities in just one experiment by the sorbent tubes. The proximity of the shelters to the engine may have contributed to concentrations of these compounds. The swirling winds may have transported the chemicals to the air near the shelter and mixed the gases there. Pinholes and pores in the shelter material may have allowed the gases to enter. Smoke may have gone under the fire shelters. This is unlikely because heavy chain weighing down the inside perimeter of the shelter appeared undisturbed after each experiment. The lowest concentration of all chemicals except toluene was recorded during the Montana burn, when the wind was moving the fire's smoke away from the vehicles. The questions raised by these results might be answered if an additional gas sampling unit were deployed inside the burn unit to measure ambient gases near the shelter and vehicle.

A special thanks to the Intermountain Fire Sciences Laboratory Fire Chemistry Research group, Clayton Environmental Laboratory, and the MTDC purchasing and shop personnel.

—Lynn Weger has worked on fire projects at MTDC since 1996. She graduated from the University of Montana with a B.S. degree in chemistry in 1987 and began working at the Forest Service's Intermountain Fire Sciences Laboratory the following year.

Component List

The following is the list of components used to assemble the gas sampling system.

Diaphragm pump, 5x4x2½ inches, 12 volt dc, 1.5 amps	KNF Neuberger, Inc.
Rechargeable gel cell battery, 7¾x4½x2¼ inches, 12 volt, 8 amp hours	Power Sonic
Tygon tubing, large size ¼-inch ID, ⅜-inch OD, 1/16-inch wall	Cole-Palmer
Tygon tubing, small size ⅛-inch ID, ¼-inch OD, 1/16-inch wall	Cole-Palmer
HDPE fittings, high-temperature resistance, various shapes	Cole-Palmer
Manifold, 12-port black anodized aluminum	Clippard Minimatic
Brass needle valves, 10-32 male	Clippard Minimatic
Brass fittings (plugs, hose barbs, pipe to hose)	Clippard Minimatic
Teflon tape	Cole-Palmer
Alpha constant-flow air sampler	Dupont
Temperature labels	Omega
Drager tubes	National Draeger, Inc.
Sorbent tubes	National Draeger, Inc.
Teflon tubing, 0.190-inch ID, 0.250-inch OD, 0.03-inch wall	Cole-Palmer
Voltrex ceramic sleeve packing, 1 inch x 25 feet, 1/32-inch wall	SPC Technology
Bulkhead Swagelok fitting	Idaho Valve and Fitting
Aluminum plate 13x16⅞x¼ inches	scrap
Steel surplus ammunition box, 17¼x 7⅝x14⅛-inch wall	scrap

References

Dean, K. C.; Sterner, J. W.; Shirts, M. B.; Froisland, L. J. 1985. Bureau of Mines research on recycling scrapped automobiles, Bulletin 684. U.S. Department of the Interior. 46 p.

Drager organization. 1994. Drager-tube handbook.

Gad, Shayne C.; Anderson, Rosalind C. 1990. In: Combustion toxicology. CRC Press: 147-192.

Gerstle, R. W.; Kemnitz, D. A. 1967. Atmospheric emissions from open burning. Journal of the Air Pollution Control Association. 17(5): 324-327.

Guastavino, Thomas M.; Speitel, Louise C.; Filipczak, Robert A. 1982. The pyrolysis toxic gas analysis of aircraft interior materials. Final report to the Department of Transportation. 33 p.

Huggett, Clayton; Levin, Barbara C. 1987. Toxicity of the pyrolysis and combustion products of poly(vinyl chlorides): a literature assessment. In: Fire and Materials. Vol. 2: 131-142.

Landrock, Arthur H. 1983. Handbook of plastics flammability and combustion toxicology. Noyes Publications.

Levin, Barbara C. 1987. A summary of the NBS literature reviews on the chemical nature and toxicity of the pyrolysis and combustion products from seven plastics: acrylonitrile-butadiene-styrene (ABS), nylons, polyesters, polyethylenes, polystyrenes, poly (vinylchlorides) and rigid polyurethane foams. In: Fire and Materials: Vol. 2: 143-157.

Madorsky, Samuel L. 1964. Thermal degradation of organic polymers. Interscience Publishers.

Miller, James A.; Fisk, George A. 1987. Combustion chemistry. Chemical and Engineering News: 22-44.

Nelson, Gordon L. 1990. Fire and polymers; hazards identification and prevention. Washington, DC: American Chemical Society: 542-565.

Paabo, Maya; Levin, Barbara C. 1987. A literature review of the chemical nature and toxicity of the decomposition products of polyethylenes. In: Fire and Materials. Vol 2: 55-70.

Paabo, Maya; Levin, Barbara C. 1987. A review of the literature on the gaseous products and toxicity generated from the pyrolysis and combustion of rigid polyurethane foams. In: Fire and Materials: Vol. 2: 1-29.

Ryan, Jeffrey V.; Lutes, Christopher C. 1993. Characterization of emissions from the simulated open-burning of non-metallic automobile shredder residue. Final report to the Environmental Protection Agency. 73 p.

Sarkos, Constantine P.; Hill, Richard G. 1988. Characteristics of transport aircraft fires measured by full-scale tests. Paper No. 467-11 from the Aircraft Fire Safety Conference Proceedings: 11-1 to 11-18.

Sarkos, Constantine P.; Hill, Richard G.; Howell, Wayne D. 1988. The development and application of a full-scale wide body test article to study the behavior of interior materials during a postcrash fuel fire. Paper No. 123 from the Aircraft Fire Safety Lecture Series: 6-1 to 6-11.

Terrill, James B.; Montgomery, Ruth R.; Reinhardt, Charles F. 1978. Toxic gases from fires. Science: 200 (4348): 1343-1347.

Appendix C—Insulated Boxes for Protecting Video Cameras

Four camera systems were designed and built to provide video documentation of tests in which instrumented fire shelters and vehicles were burned over by simulated wildfires. A wildfire is able to reach temperatures of 1093 ˚C for short periods and 815 ˚C for longer times. Each system uses a video camera (no recorder) in an insulated box with a video tape recorder and battery in another box buried underground.

The camera is a Sony SSC-DC30 with a threaded "C" mount that accepts various lenses. Lenses from 3.5 to 50 mm are available. This camera requires a 12- to 18-volt, 4.5-amp current and outputs a standard NTSC video signal.

The recorder is a Sony Hi8 camcorder (CCD-TR700). The camera portion of this unit is not used. The video signal from the SSC-DC30 camera is fed directly into the video tape recorder. The camcorder requires a 6.5-volt, 2-amp current.

One battery powers both units. The battery is a 14-volt, 5-amp-hour Gates Cell that is fused. The camera is powered directly from the battery; the camcorder uses an adapter to reduce the voltage.

The insulated box, made of 16-gauge stainless steel (Type 306), has tripod mounts welded on the bottom. The insulation inside the box is 1-inch thick ceramic board. This ceramic has a continuous-use temperature of 1260 ˚C. Its thermal conductivity at 815 ˚C is 0.95 BTU inches Hr ˚F Ft^2.

The window for the camera is a thermopane design using Corning Vycor glass on the outside and a hot mirror on the inside. The Vycor glass is 96% silica and 4% boric oxide. It can be used continuously at 898 ˚C and intermittently to 1298 ˚C. This glass has a high resistance to heat shock. It can be heated to 900 ˚C and plunged into ice water without breaking. The inner glass is a dichroic mirror that transmits 90% of visible light (400 to 700 nm) and reflects 98% of the infrared light (wavelengths greater than 700 nm). The metal coating on the glass faces the outside of the box. This prevents radiant energy from heating the camera.

The Sony SSC-DC30 camera uses 4.5 watts of power. This will generate heat that raises the temperature inside the insulated box 0.0033 ˚C per second or 24 ˚C in 2 hours. The resulting temperature would be higher than the maximum recommended temperature of 52 ˚C. To keep the camera cool, 16 ounces of blue ice is frozen and placed under the camera mount. The power and video cables connecting the camera to the battery and recorder are routed through woven ceramic sleeving that is routed through steel conduit. The conduit is then wrapped with ceramic blanket (rated for continuous use at 1300 ˚C) and the assembly is wrapped with aluminized fire shelter material.

The camera must be within 5 to 10 feet of the subject. If the camera is farther away, smoke is likely to obscure the subject. The camera is mounted on the aluminum base plate, placed in the insulated box, and connected with a coax cable to the Tektronics waveform/video monitor. The Tektronics monitor becomes the viewfinder. The waveform is used to adjust the camera exposure. After the exposure has been adjusted, the monitor is disconnected and the camera is connected to the video camcorder/video tape recorder (VTR). The recorder can record for 2 hours.

Instructions for the Video Camera Systems

1—Freeze the blue ice 2 days before use (some freezers will not freeze the ice overnight).

2—Bolt the tripod legs to the box with ¼-inch bolts. Insert the power cable and the coax cable into the box one at a time. Connect the insulated conduit to the bottom of the box.

3—Choose the camera location and set up the boxes. The wide-angle camera lenses allow the camera boxes to be within 5 to 10 feet of the subject. This is important because smoke can obscure the subject. *Cameras inside vehicles must use the 3.6 mm Computar lens.*

4—Mount the camera on the aluminum channel with a ¼-inch flathead bolt. Connect the power cable. Connect the coax cable to "video out" using a right-angle BNC adapter.

5—The switches on the back of the camera are:

DC 12V—*off and on*
MODE—*B*
WHT BAL—*ATW*

6—The switches on the side of the camera are:

SHUTTER SPEED—*2*
AUTO IRIS—*video*

When using the Computar lens (black), plug the lens cable into the lens terminal.

CCD-IRIS—*off*
AGC—*off*

When using the Angenieux Lens (silver):

CCD-IRIS—*on*
AGC—*on*

7—The battery box is placed in the ground (not too deep at first, because dirt tends to fall inside the box before it is sealed). The power cable, the coax cable, and the remote control cable are fed through the hole in the lid. The hole is taped to prevent dirt from entering.

8—Connect the power cable to the battery. Connect the camcorder power cable to the battery and to the camcorder.

9—Connect the coax cable from the Tektronics monitor to the coax cable from the camera using a female-female phono adapter.

10—Turn on the camera and the Tektronics monitor. The PIX button shows the picture from the camera. The WFM button shows the waveform (exposure).

11—Focus the lens on infinity (the wide-angle lenses do not focus). The lens mount must be adjusted by loosening the Phillips screw (LOCK) on the side of the camera and turning the lens thumbscrew on top of the camera. Use the Tektronics monitor (PIX) to view the picture.

12—The Computar lenses have two adjustments:

ALC (automatic level control)—A (average), P (peak).

LEVEL (exposure)—High or Low.

To adjust the exposure, put the Tektronics monitor on WFM. The scale on the waveform is from 0 to 100%. It is okay to have some spikes above 100%, but if there is a solid line above 100%, the video is overexposed. *When setting up the camera inside a vehicle, the windows will be overexposed. After fire and smoke surround the vehicle, the exposure will be fine.* Start with the ALC in the middle and adjust the LEVEL. Inside the vehicle it is better to set the ALC toward A (average).

13—Disconnect the camera coax cable from the Tektronics monitor and plug it into the video jack (yellow) on the camcorder. Use a right-angle phono plug adapter. *The CCD-TR101 has a switch that must be set to input.*

14—Plug the remote control into the REMOTE jack. Then turn the camcorder power switch to VTR. *The power switch on the remote can turn the power on or off only if the power switch on the camera is set to VTR.* Insert a 120-minute tape. Look into the viewfinder to confirm that the video signal is coming from the camera. If it is not, check all power and cable connections.

15—Record some video by pressing the two REC buttons on the remote control. Rewind and play the tape. *The remote control will show the counter running and a round dot will display, confirming that the camcorder is recording.* The playback can be viewed in the viewfinder or by connecting the Tektronics monitor to the camcorder video jack.

16—Close the boxes and start recording just before the fire. Seal the camcorder box and the remote control in a plastic bag and bury them. *Be careful not to depress any buttons when burying the remote control.*

—Jim Kautz heads the Audio-Visual Support Unit at MTDC. He graduated from Montana State University in 1975 with a B.S. degree in film and television production. He worked in fire control positions and as a smokejumper before coming to the Center in 1976.